RF system design and simulation using GaN
12 & 13 March 2015

Presented by
Bhupinder Singh

Finetuning Academy

RF & Wireless matters

Course Description

This 2-Day workshop addresses the following key areas: Overview of RF System design, RF system simulation using ADS, GaN HEMT based PA simulation using non-linear models in ADS, PA circuit design in CW / Pulse mode, Doherty PA Configuration using GaN devices

Learning Objectives

- RF System design – Basics, Simulation using ADS – Advanced Techniques
- Using Non-Linear Models to design the PA Circuit
- Design Constraints for different Modulation Schemes like QPSK, QAM, OFDM
- Design of RF Power Amplifier using GaN HEMT in Pulsed / CW mode
- Design of RF Power Amplifier using GaN HEMT in Doherty configuration

- **Schedule**

Topics, Mar-12, Thursday	Time
Power Amplifier - Efficiency and Linearity enhancement Techniques	900-1030
Tea Break	1030-1045
Power Amplifier - Efficiency and Linearity enhancement Techniques	1045-1115
GaN Power amplifier design with Simulation examples (CW Mode, Broadband)	1115-1300
Lunch Break	1300-1345
GaN Power amplifier design with Simulation examples (Doherty Configuration)	1345-1500
Tea Break	1500-1515
GaN based PA design, Die version, in Ku-band	1515-1630
Interactive Session	1630-1700

Topics, Mar-13, Friday	Time
RF System design - Introduction	900-1030
Tea Break	1030-1045
RF System design and Simulations using ADS	1045-1300
Lunch Break	1300-1345
RF System design and Simulations using ADS	1345-1500
Tea Break	1500-1515
RF System design and Simulations using ADS	1515-1630
Interactive Session	1630-1700

Speaker

- **Bhupinder Singh** received his Master's Degree in Microwave System Design from IIT Kanpur, Kanpur India. He has 23 years of RF system / subsystem design, development and testing for Govt, Military, and Cellular and VSAT industry. He is currently Director-Technical at RF Specialities. He was a scientist at Aeronautical Development Establishment from 1991-2001. Previously he was RF Design Lead at HFCL, DMC-STRATEX, Blackbay, Technical Head-Telecom R&D at Astra MWP, Eminent Systems. He is an advanced user of Simulation tools like ADS, MWO, ALTIUM and ACAD. He is skilled at using Spectrum Analyzer, NW Analyzer, Vector Signal Analyzers, signal generators. **RF Specialities** (RFS) is one of the leading companies in the development, design, servicing and maintenance of RF Equipment in India. Boasting of a state-of-the-art RF laboratory and backed with experienced & well-trained manpower, it provides unique and cost-effective solutions in the shortest turn-around time for the satellite, broadcasting, telecom and military industry.

- **Module-1: RF Power Amplifier**
  - PA Fundamentals
  - GaN Technology – Properties
  - PA Design Steps, Device Selection and Model
  - Simulated Load Pull
  - PA Measurement
  - One Tone and Two Tone IMD
  - ACPR WCDMA (PAR 6dB)

- **Module-2: RF Power Amplifier Efficiency Enhancement Techniques**
  - Doherty PA – Conventional and Modified
  - Envelope Elimination and Restoration
  - BIAS Adaption

- **Module-3: RF Power Amplifier Linearization Techniques**
  - PA Characterization
  - Digital Communication System
  - Feedforward Linearizer
  - Digital Pre-distortion
  - Adaptive Digital Pre-distortion
  - Adaptive Digital Pre-distortion at IF
  - Adaptive Digital Pre-distortion at Baseband

- **Topic 4: RF System Design**
  - Analog Transceiver Parameters
  - Noise Figure
  - Noise Figure of Cascade
  - Equivalent Noise Temperature
  - 1-db Compression
  - Dynamic Range
  - IMD
  - Digital Modulated System
  - BER
  - QAM System – Primary Noise and Distortion Elements
  - Effect of Source Phase Noise

Assessment and Evaluation

- Q and A Session
- Quiz to assess how much information participants learned
- Survey participants to see if they found the training beneficial

MODIFIED DPA USING GaN TRANSISTOR

Presented by
Bhupinder Singh

Finetuning Academy

RF & Wireless matters

INTRODUCTION

- Power Amplifiers for Efficiency and Power Output
- BJTs, GaAsFETs, VDMOS, LDMOS, GaN
- Controlled source and switched mode PA
- Modes of Operation for controlled source PAs : A, B, AB, C

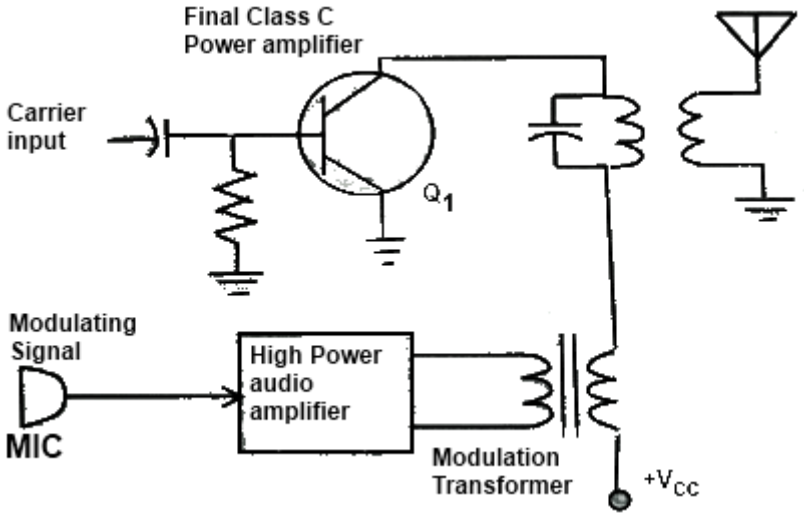

PA FUNDAMENTALS

ASSUMPTIONS

- *Load is purely resistive*
- *All harmonics shorted*
- *Constant trans conductance (g_m)*
- *Knee voltage is small compared with drain voltage*

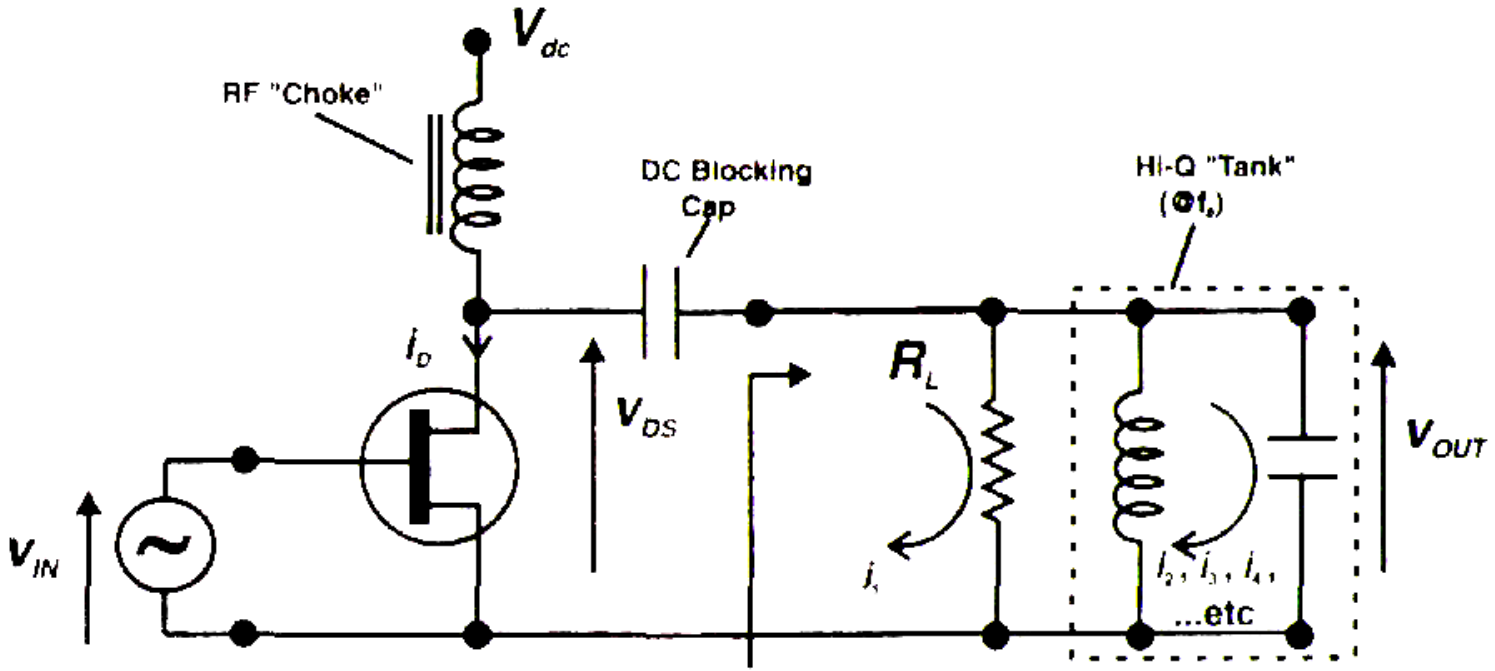

$Z_L = R_L + j0 \ (f_0)$

$Z_L = 0 \ (2f_0, 3f_0, \ldots\ldots etc.)$

PA FUNDAMENTALS

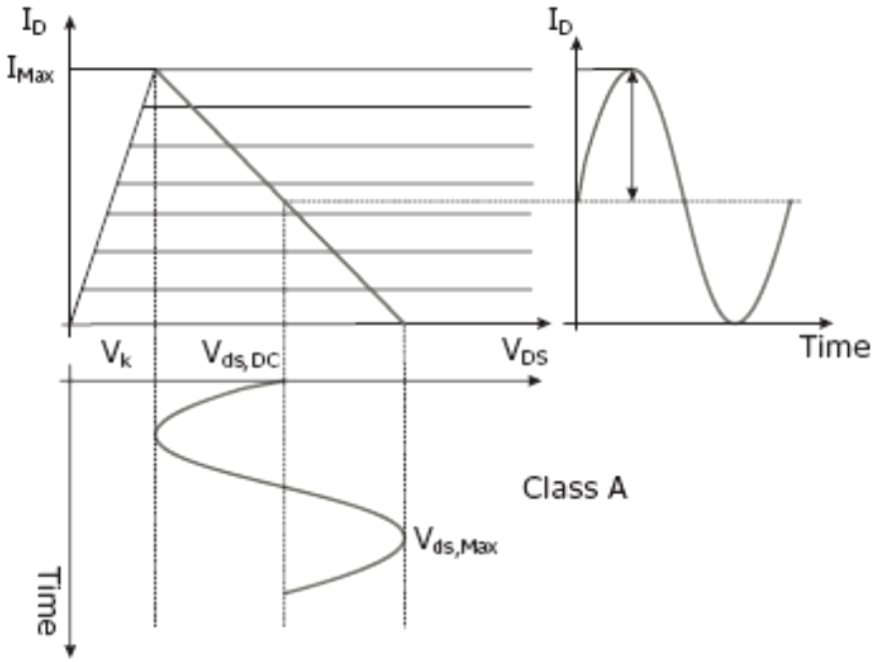

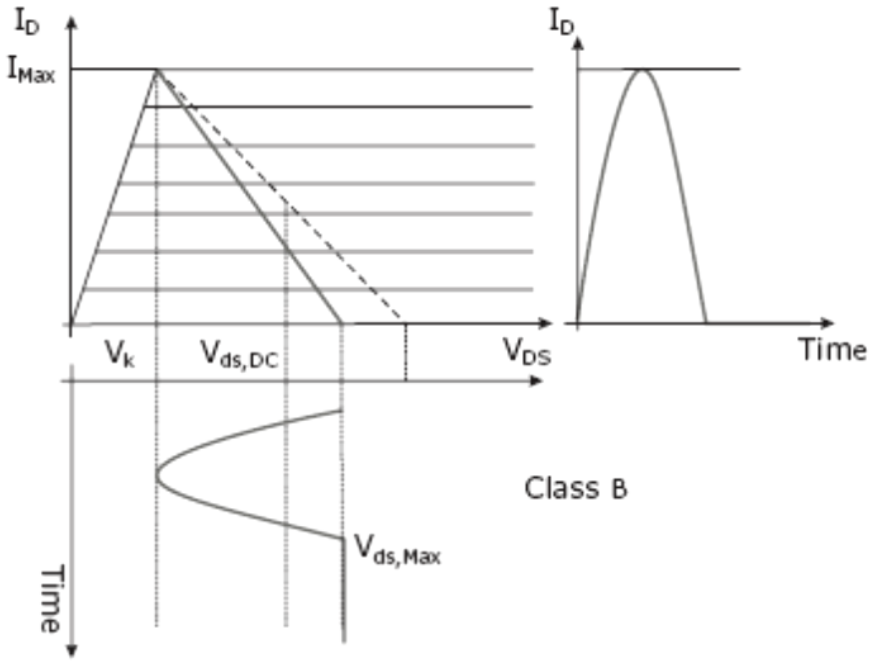

Class-A

$$I_{DC} = I_{DQ} = \frac{v_{ds,max}}{R} = \frac{V_{DD}}{R}$$

$$P_{dc} = V_{DD} I_{DC} = \frac{V_{DD}^2}{R}$$

$$\boxed{P_{o,max} = \frac{v_{ds,max}^2}{2R} = \frac{V_{DD}^2}{2R}}$$

$$\eta = \frac{P_{o,max}}{P_{dc}} = \frac{1}{2} = \mathbf{50\%}$$

$$V_{ds,max} = 2V_{DD}$$

$$I_{ds,max} = 2I_{DQ} = \frac{2V_{DD}}{R}$$

$$P_{max} = \frac{P_{o,max}}{V_{ds,max} I_{ds,max}} = \frac{1}{8}$$

Class-B

$$I_{DC} = \frac{I_{ds,max}}{\pi} \; ; \; I_1 = \frac{I_{ds,max}}{2}$$

$$P_{dc} = V_{DD} I_{DC} = V_{DD} \frac{I_{ds,max}}{\pi}$$

$$P_o = \frac{V_{DD}}{2} I_1 = \frac{V_{DD}}{2} \frac{I_{ds,max}}{2}$$

$$\eta = \frac{P_{o,max}}{P_{dc}} = \frac{\pi}{4} = \mathbf{78.5\%}$$

$$P_{max} = \frac{P_{o,max}}{V_{ds,max} I_{ds,max}} = \frac{1}{8}$$

PA FUNDAMENTALS

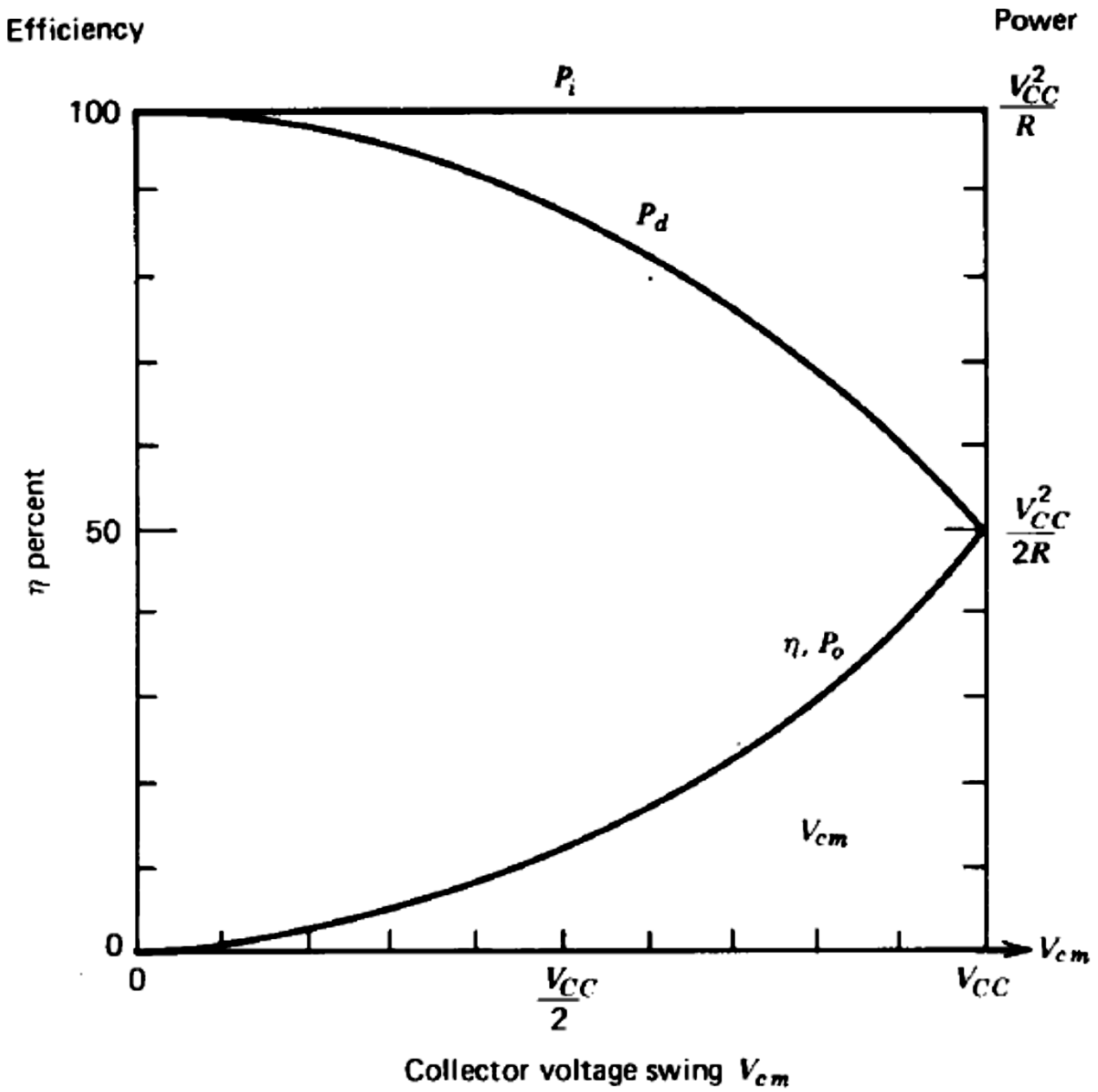

PA FUNDAMENTALS

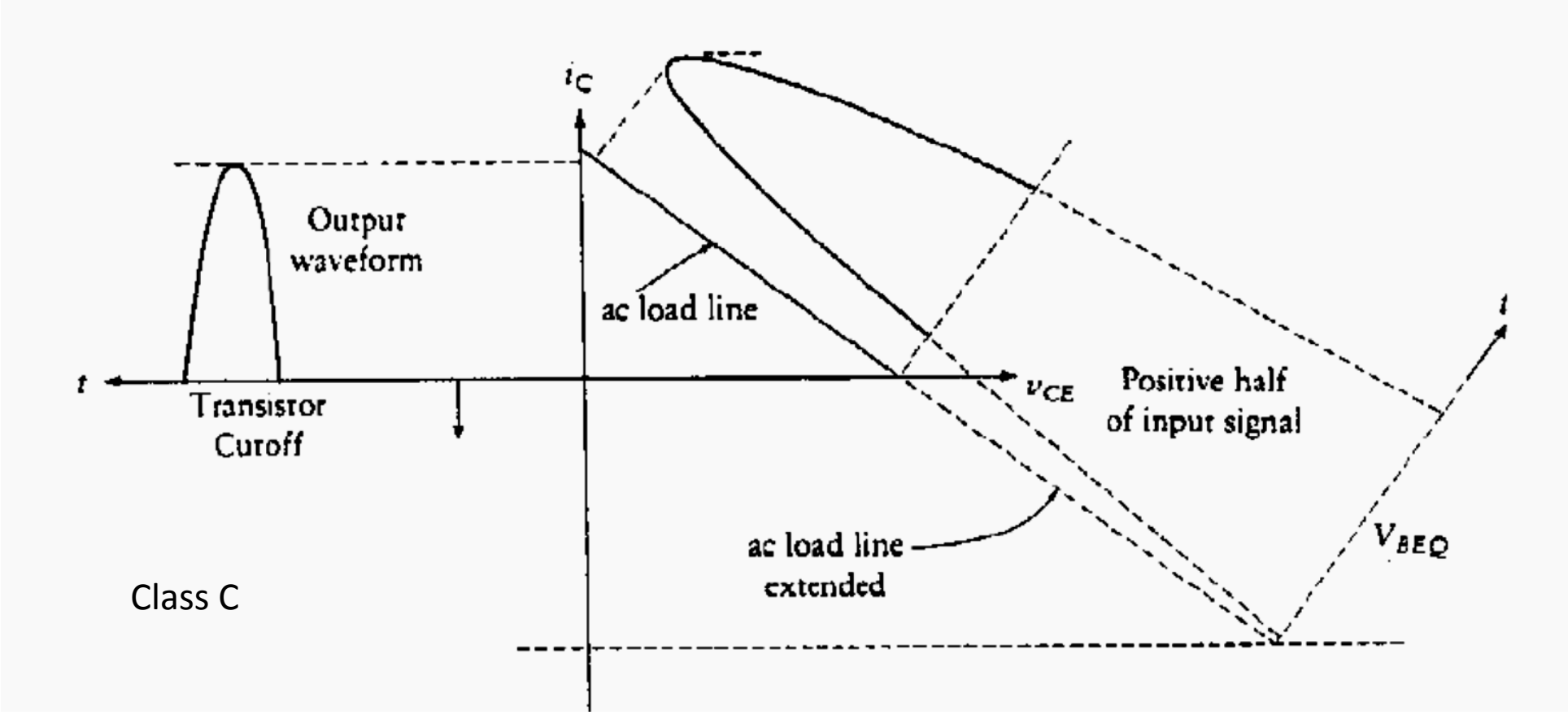

Class C

PA FUNDAMENTALS

$$I_n = \begin{cases} \dfrac{I_{Max}}{2\pi} \cdot \dfrac{2 \cdot \sin\left(\dfrac{\Phi}{2}\right) - \Phi \cdot \cos\left(\dfrac{\Phi}{2}\right)}{1 - \cos\left(\dfrac{\Phi}{2}\right)} & n = 0 \\[2ex] \dfrac{I_{Max}}{2\pi} \cdot \dfrac{\Phi - \sin(\Phi)}{1 - \cos\left(\dfrac{\Phi}{2}\right)} & n = 1 \\[2ex] \dfrac{2 \cdot I_{Max}}{\pi} \cdot \dfrac{\sin\left(n \cdot \dfrac{\Phi}{2}\right) \cdot \cos\left(\dfrac{\Phi}{2}\right) - n \cdot \sin\left(\dfrac{\Phi}{2}\right) \cdot \cos\left(n \cdot \dfrac{\Phi}{2}\right)}{n \cdot (n^2 - 1) \cdot \left[1 - \cos\left(\dfrac{\Phi}{2}\right)\right]} & n \geq 2 \end{cases}$$

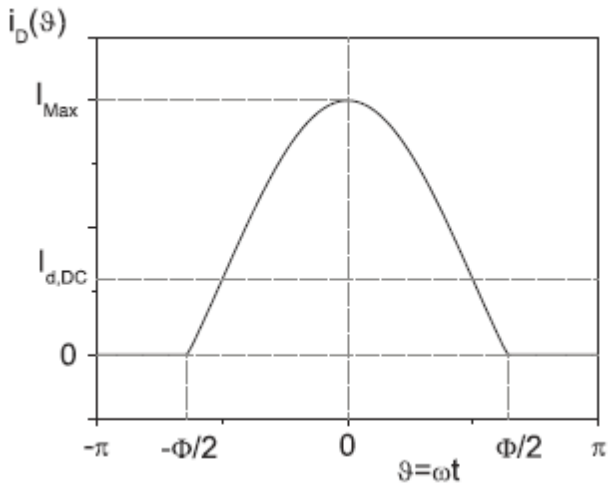

ϕ is the current conduction angle (CCA)

PA FUNDAMENTALS

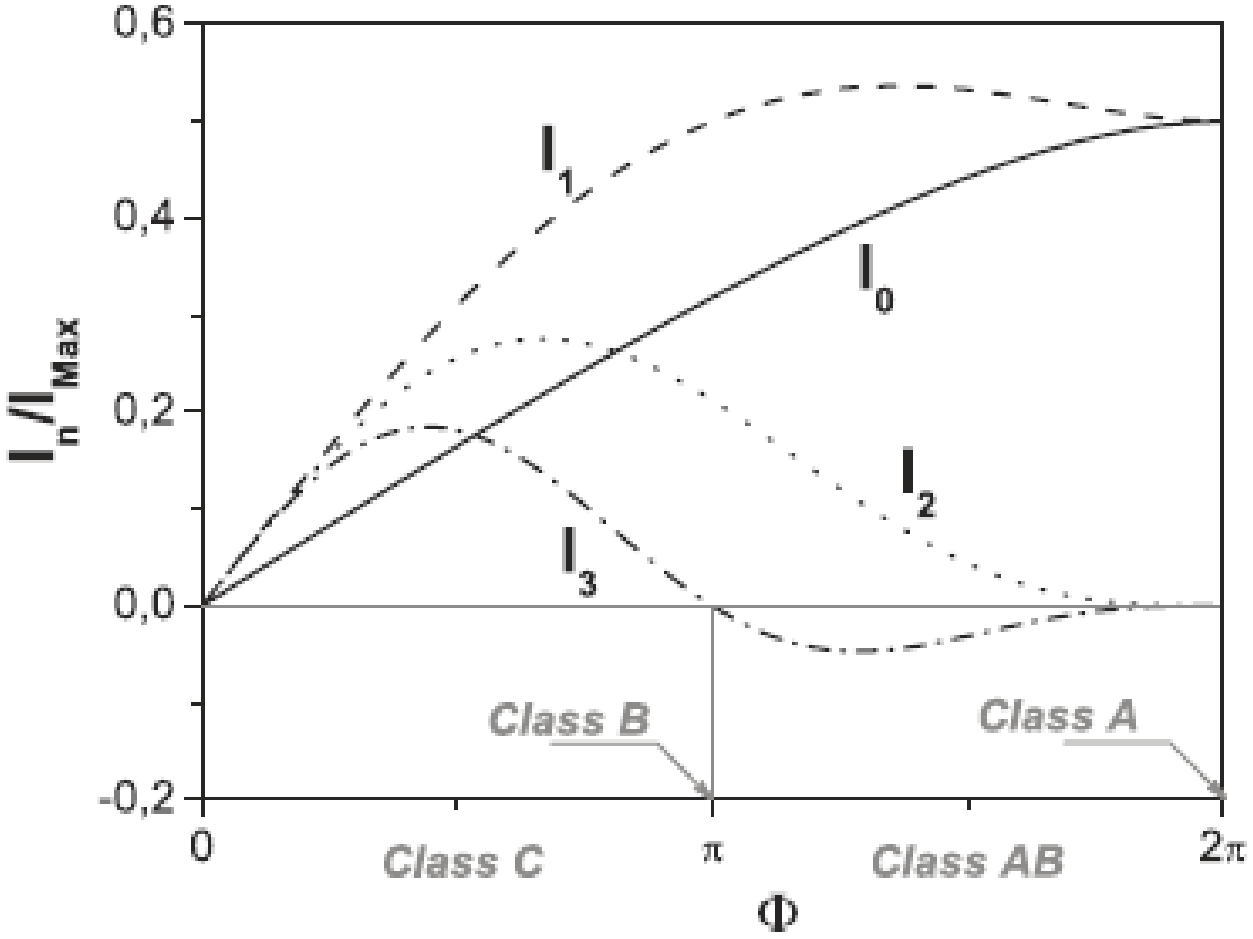

PA FUNDAMENTALS

Optimum load at fundamental frequency is given by

$$R_{opt}(\Phi) = \frac{V_{1,Max}}{I_1(\Phi)} = R_A \cdot \pi \cdot \frac{1-\cos\left(\frac{\Phi}{2}\right)}{\Phi - \sin(\Phi)}$$

$$P_{DC} = I_0 \cdot V_{ds,DC} = \frac{P_{DC,A}}{\pi} \cdot \frac{2 \cdot \sin\left(\frac{\Phi}{2}\right) - \Phi \cdot \cos\left(\frac{\Phi}{2}\right)}{1-\cos\left(\frac{\Phi}{2}\right)}$$

$$P_{RF} = \frac{I_1 \cdot V_1}{2} = \frac{P_{RF,A}}{\pi} \cdot \frac{\Phi - \sin(\Phi)}{1-\cos\left(\frac{\Phi}{2}\right)}$$

$$\eta = \frac{P_{RF,TL}}{P_{DC,TL}} = \eta_A \cdot \frac{\Phi - \sin(\Phi)}{2 \cdot \sin\left(\frac{\Phi}{2}\right) - \Phi \cdot \cos\left(\frac{\Phi}{2}\right)}$$

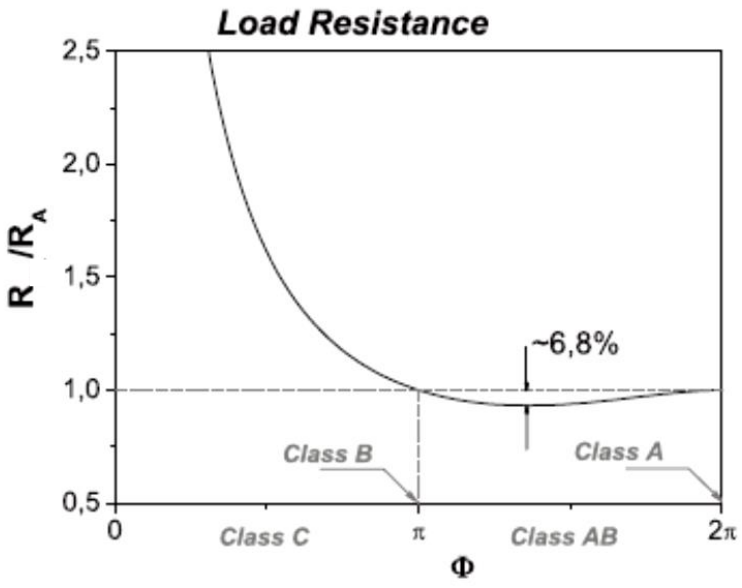
Load Resistance
2,5
2,0
1,5
1,0
0,5
R /R_A
~6,8%
Class B
Class A
0
Class C
π
Class AB
2π
Φ

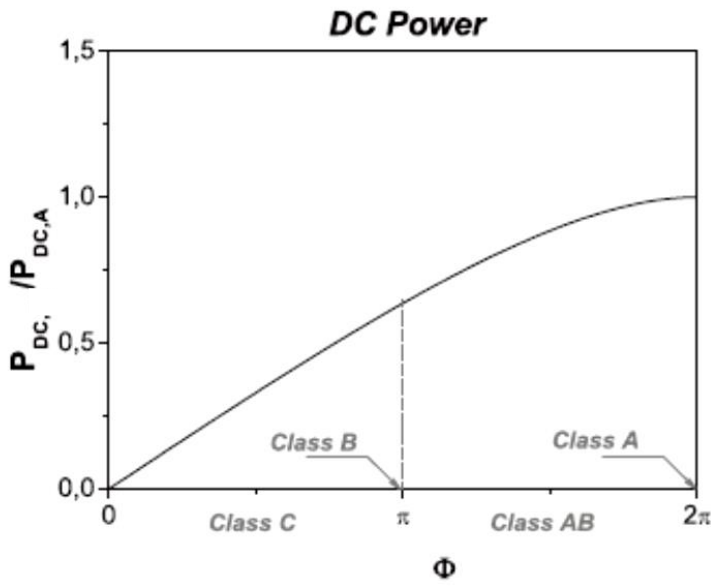
DC Power
1,5
1,0
0,5
0,0
P_DC, /P_DC,A
Class B
Class A
0
Class C
π
Class AB
2π
Φ

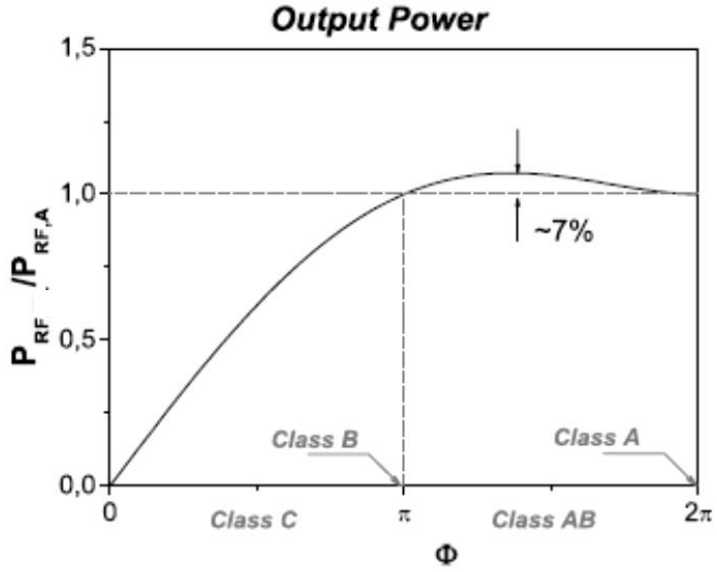
Output Power
1,5
1,0
0,5
0,0
P_RF /P_RF,A
~7%
Class B
Class A
0
Class C
π
Class AB
2π
Φ

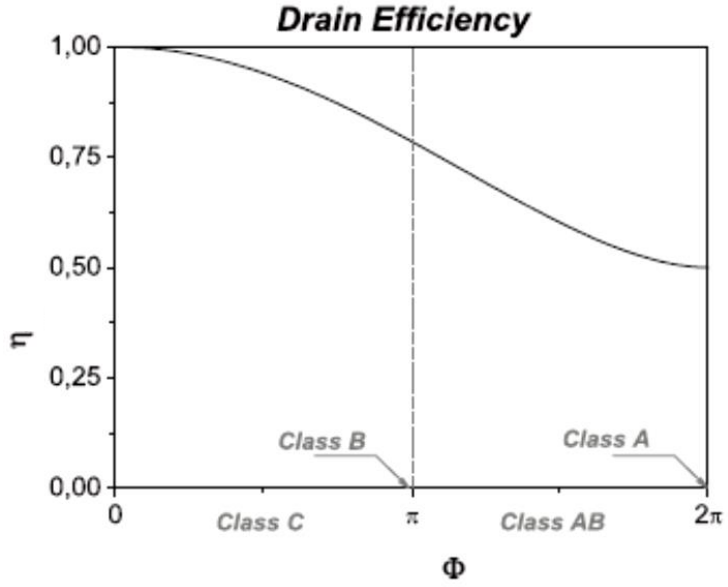
Drain Efficiency
1,00
0,75
0,50
0,25
0,00
η
Class B
Class A
0
Class C
π
Class AB
2π
Φ

$$P_{diss,TL} = \frac{1}{2\pi}\int_{-\pi}^{\pi} i_D(\theta)\cdot v_{DS}(\theta)\cdot d\theta =$$

$$= \frac{P_{DC,A}}{\pi}\cdot\frac{\sin\left(\frac{\Phi}{2}\right)\cdot\left[2+\cos\left(\frac{\Phi}{2}\right)\right]-\frac{\Phi}{2}\cdot\left[1+2\cdot\cos\left(\frac{\Phi}{2}\right)\right]}{1-\cos\left(\frac{\Phi}{2}\right)}$$

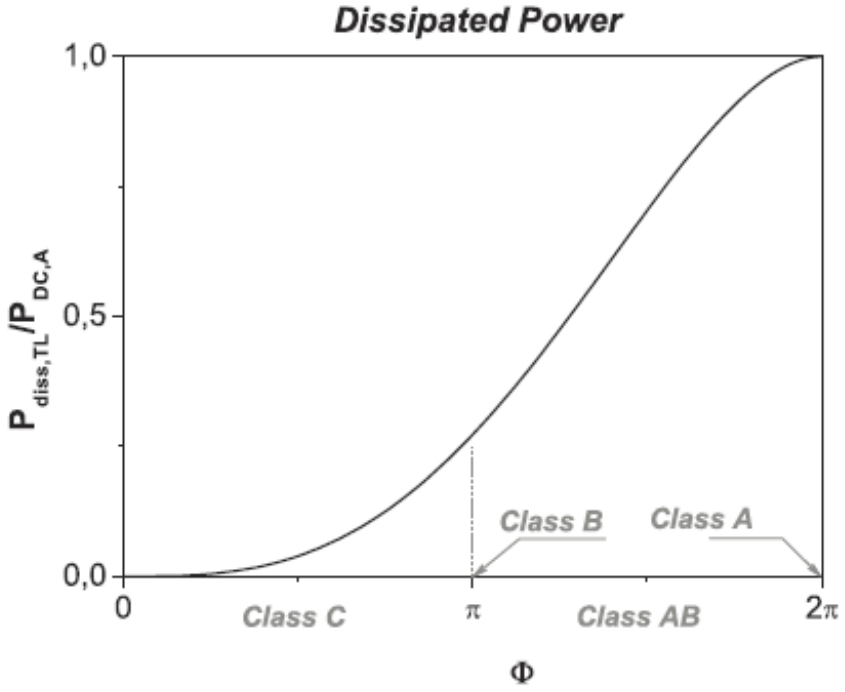

$$G_{AB} = G_A \cdot \frac{R_{TL}(\Phi)}{R_A} \cdot \left[\frac{\Phi - \sin(\Phi)}{2\pi}\right]^2$$

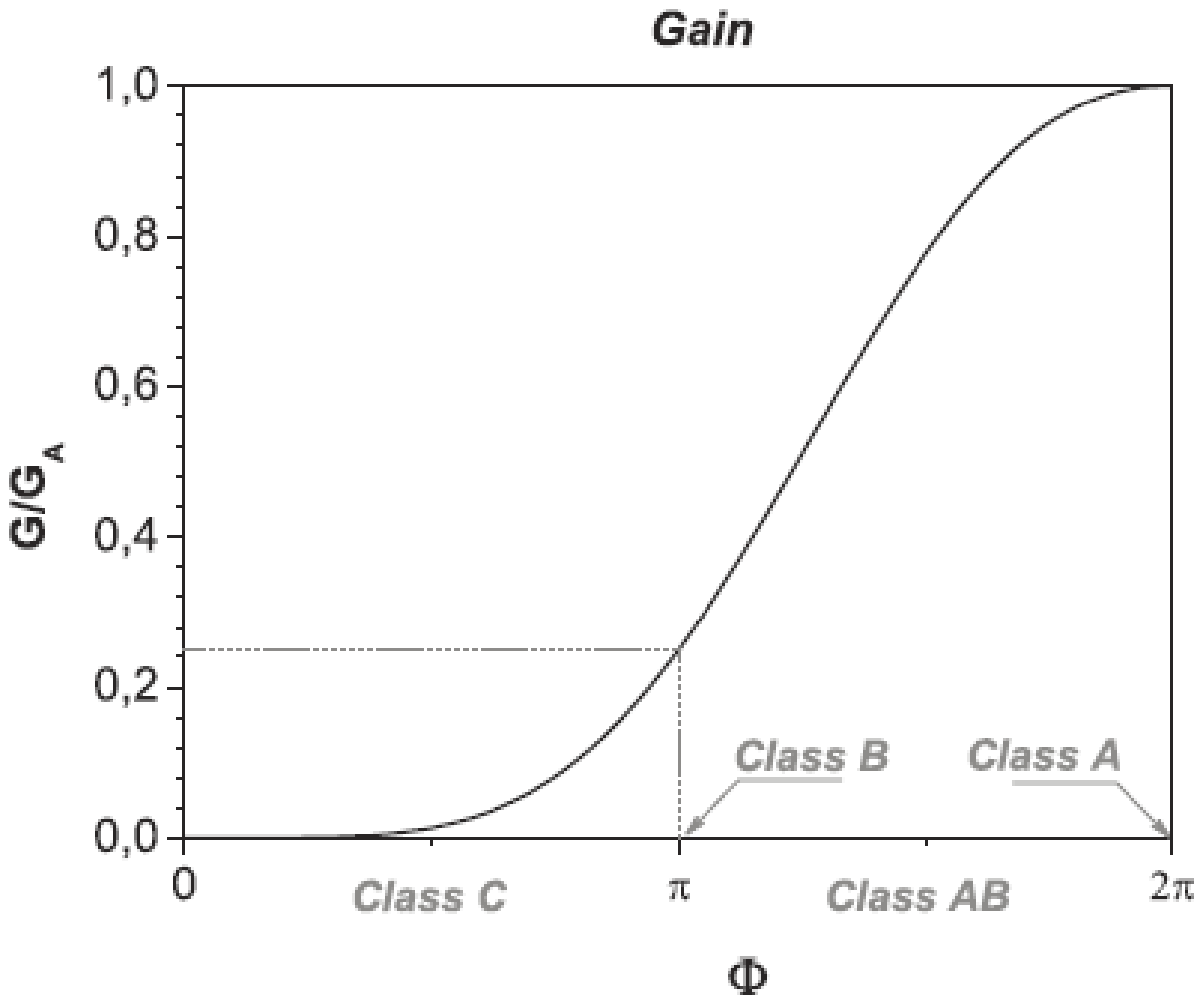

SEMICONDUCTOR PROPERTIES

Property	Si	GaAs	SiC	GaN
Energy Gap (eV)	1.11	1.43	3.2	3.4
Critical Electric Field (MV/cm)	0.6	0.5	3.0	3.5
Charge Density (# x $1x10^{13}/cm^2$)	0.3	0.3	0.4	1
Thermal Conductivity (W/cm/K)	1.5	0.5	4.9	1.5
Mobility ($cm^2/V/s$)	1300	6000	600	1500
Wide Band Gap & No Dopants in barrier layer	No	No	No	Yes
Polarization-Enhanced BandGap-Engineered Epitaxy	No	No	No	Yes

→ Ruggedness

→ Power Handling

→ Low Loss, Low Noise

→ UNREALIZED Potential

SEMICONDUCTOR PROPERTIES

Property	Si	GaAs	GaN
E_g (eV)	1.1	1.4	**3.4**
v_s (10^7 cm/s)	0.7	0.8	**2.5**

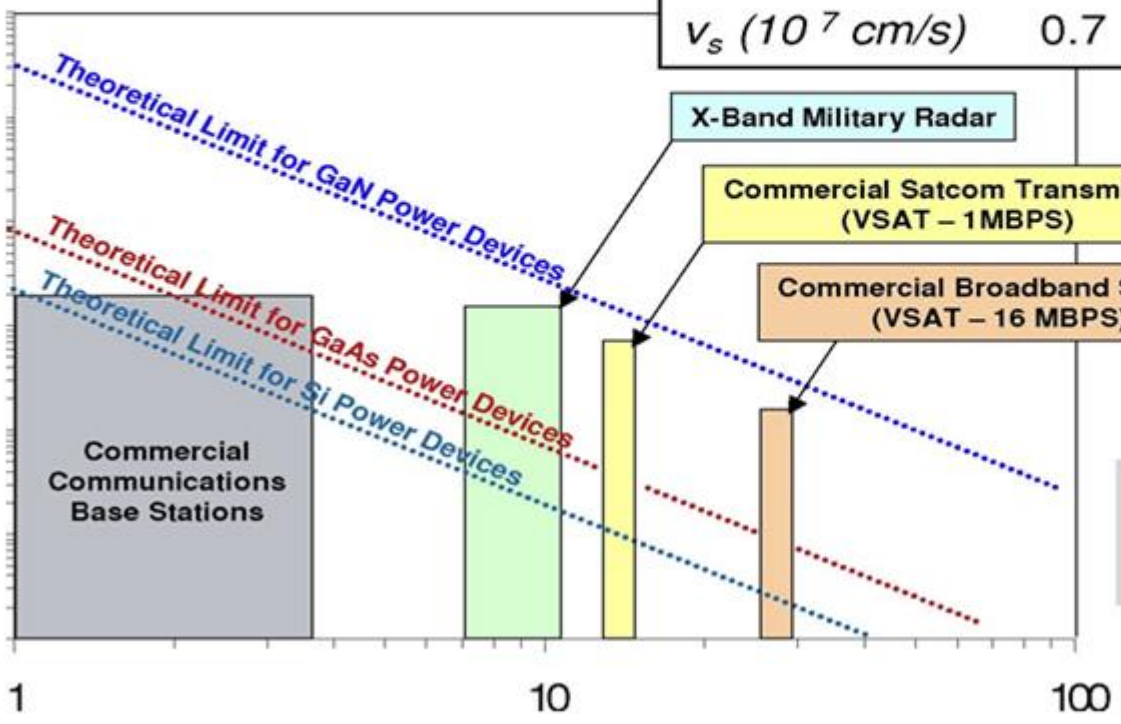

$$P_{max} \propto \frac{E_g^4 v_s^2}{F^2}$$

Design steps for PA realization

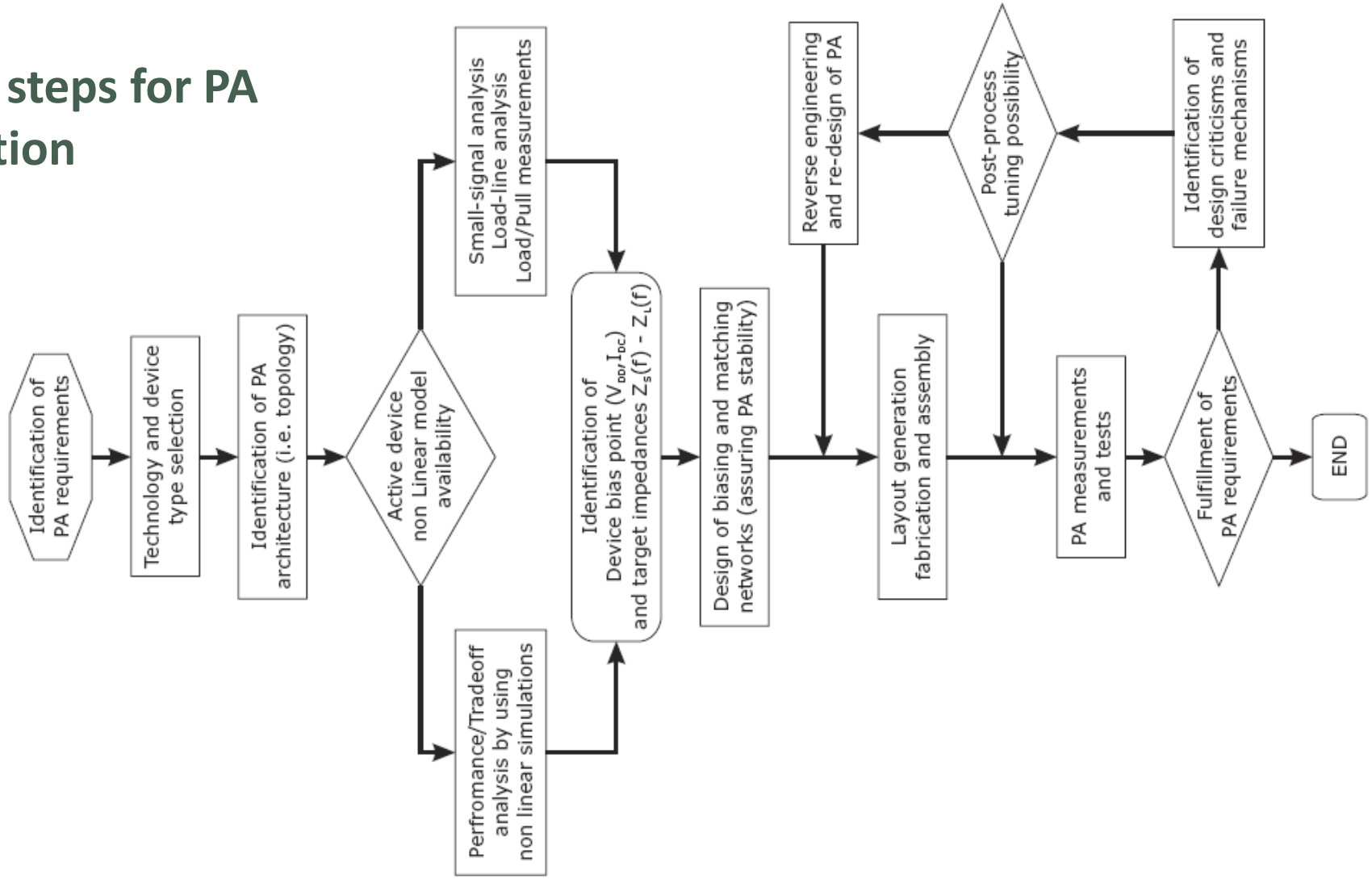

PA DEVICE SELECTION

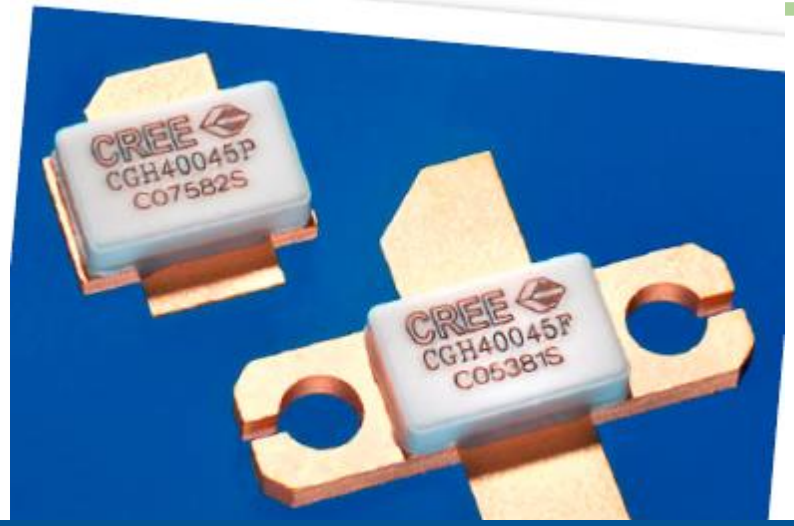

FEATURES

- Up to 4 GHz Operation
- 16 dB Small Signal Gain at 2.0 GHz
- 12 dB Small Signal Gain at 4.0 GHz
- 55 W Typical P_{SAT}
- 55 % Efficiency at P_{SAT}
- 28 V Operation

APPLICATIONS

- 2-Way Private Radio
- Broadband Amplifiers
- Cellular Infrastructure
- Test Instrumentation
- Class A, AB, Linear amplifiers suitable for OFDM, W-CDMA, EDGE, CDMA waveforms

PA DEVICE SELECTION

Absolute Maximum Ratings (not simultaneous) at 25˚C Case Temperature

Parameter	Symbol	Rating	Units	Conditions
Drain-Source Voltage	V_{DSS}	84	Volts	25˚C
Gate-to-Source Voltage	V_{GS}	-10, +2	Volts	25˚C
Storage Temperature	T_{STG}	-65, +150	˚C	
Operating Junction Temperature	T_J	225	˚C	
Maximum Forward Gate Current	I_{GMAX}	15	mA	25˚C
Maximum Drain Current[1]	I_{DMAX}	6	A	25˚C
Soldering Temperature[2]	T_S	245	˚C	
Screw Torque	τ	80	in-oz	
Thermal Resistance, Junction to Case[3]	$R_{\theta JC}$	2.8	˚C/W	85˚C
Case Operating Temperature[3,4]	T_C	-40, +150	˚C	

PA MODEL

Simulated Source and Load Impedances

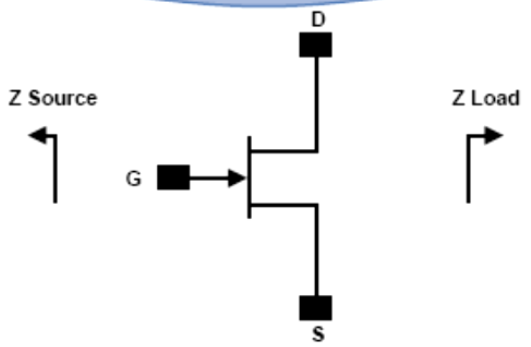

Frequency (MHz)	Z Source	Z Load
500	4.1 + j5.27	14.73 + j6.91
750	2.9 + j 4.1	12.3 + j 7.6
1000	2.48 + j0.06	8.13 + j6.85
1100	1.9 + j 3.1	9.2 + j 6.2
1500	2.1 - j 2.5	6.0 + j 4.3
1700	1.05 - j2.48	5.07 + j.2.29
1800	2.1 - j1.9	5.8 + j 4.1
1900	0.89 - j2.62	4.81 + j2.17
2000	0.69 - j3.75	4.93 + j0.16
2100	1.5 - j 4.4	5.1 + j 2.8
3000	1.06 - j8.92	4.04 - j2.98
4000	1.67 - j18.1	4.97 - j8.25

Note 1. V_{DD} = 28V, I_{DQ} = 800mA in the 440193 package.

Note 2. Optimized for power gain, P_{SAT} and PAE.

Note 3. When using this device at low frequency, series resistors should be used to maintain amplifier stability.

SIMULATED LOAD PULL

Device I and V Waveforms at Min Bias Current

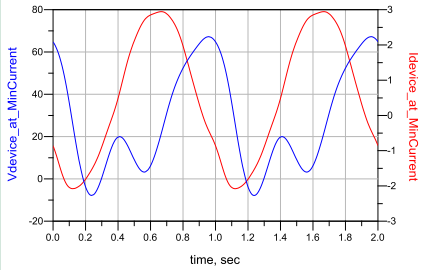

At load that gives minimum bias current:

MinBiasCurrent	Zload_at_MinCurrent	MinCurrentRho
0.502	0.172 + j12.070	0.990 / 44.997

PAE_at_MinCurrent
-1.021

Z_In_at_MinCurrent	Gain_at_MinCurrent
2.526 + j2.165	-6.672

Pdel_dBm_at_MinCurrent
27.328

Device I and V Waveforms at Max PAE

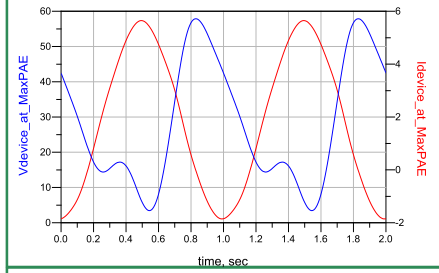

At load that gives maximum PAE:

BiasCurrent_at_MaxPAE	Zload_at_MaxPAE	MaxPAE_Rho
1.861	5.043 + j3.366	0.318 / 70.739

PAEmax
65.246

Z_In_at_MaxPAE	Gain_at_MaxPAE
2.470 + j1.511	11.422

Pdel_dBm_at_MaxPAE
45.422

Device I and V Waveforms at Maximum Power

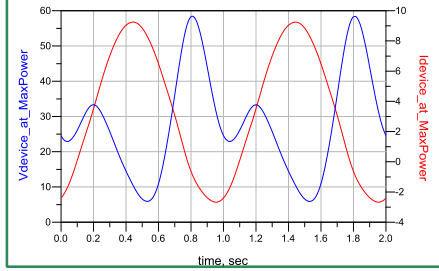

At load that gives maximum power (and gain):

BiasCurrent_at_MaxPower	Zload_at_MaxPower	MaxPowerRho
3.265	2.486 + j0.564	0.343 / 163.060

PAE_at_MaxPower
47.280

Z_In_at_MaxPower	Gain_at_MaxPower
2.181 + j0.986	12.458

Pdel_dBm_Max
46.458

Data Display: HB1Tone_LoadPull_Sweep_CGH40045F
Dataset Date/Time: Mar 07, 2015 05:14:07 PM
Dataset: HB1Tone_LoadPull_Sweep_CGH40045F

At load selected by marker m1:

BiasCurrent_at_m1	Zload_at_m1	Rho_at_m1
4.333	1.316 - j1.243	0.604 / -150.215

PAE_at_m1
24.293

Z_In_at_m1	Gain_at_m1
2.275 + j0.439	10.868

Pdel_dBm_at_m1
44.868

Device I and V Waveforms at Marker m1 Load

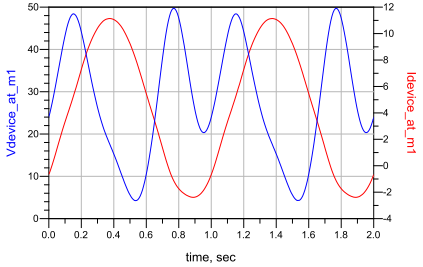

PAE and Delivered Power Contours

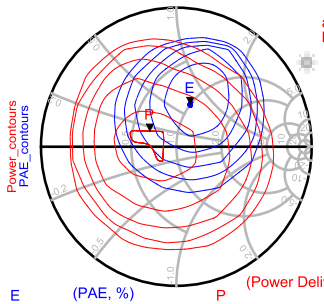

Maximum Power and contour levels, dBm:
46.41
46.00
45.00
44.00
43.00
42.00

Maximum PAE and contour levels, %:
65.181
60.000
55.000
50.000
45.000
40.000

Reference Z0
5.000 + j0.000

E (PAE, %) level=65.181, number=29
4.996 + j3.389

P (Power Delivered, dBm) level=46.412, number=64
3.292 + j0.777

Available Source Power, dBm
34.000

Contours of Constant Transducer Power Gain, simulated load reflection coefficients and corresponding input reflection coefficients

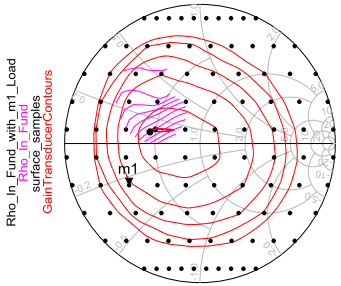

Fundamental Source Z
0.500 + j0.900

Maximum Transducer Power Gain and contour levels, dB:
12.446
12.000
11.000
10.000
9.000
8.000

● Black dot is input reflection coefficient with load selected by marker m1.

Select value of swept variable by moving marker

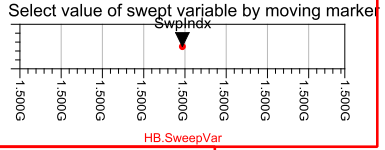

Set new reference impedance:
Eqn Z0new=5-j*12

Re-Normalized PAE and Delivered Power Contours

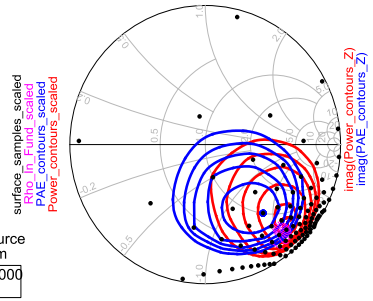

Set power and gain contour step sizes (dBs) and PAE contour step size (%), and number of contour lines

Eqn PAE_step=5
Eqn NumPAE_lines=5

Eqn Gain_step=1
Eqn NumGain_lines=5

Eqn PowerStep=1
Eqn NumPower_lines=5

PAE_Z level=40.000, number=28
2.802 - j1.256

Pdel_Z level=46.412, number=72
3.298 + j0.096

PAE and Delivered Power Contours

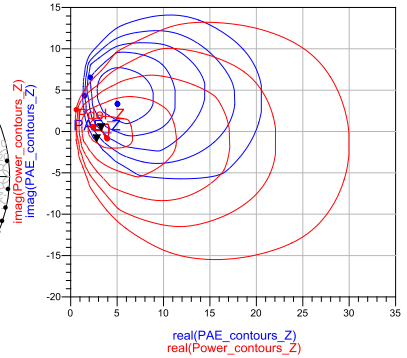

Contours of Constant Transducer Power Gain, simulated load impedances and corresponding input impedances

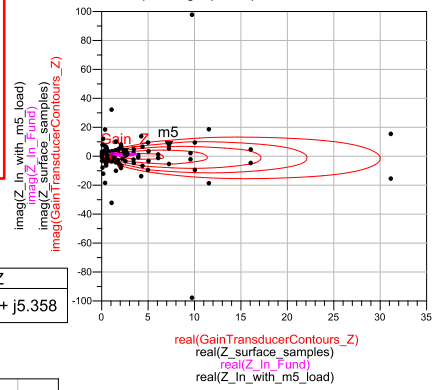

m5_Z
7.243 + j5.358

Gain_Z level=12.446, number=35
2.468 + j0.563

Device Load Lines

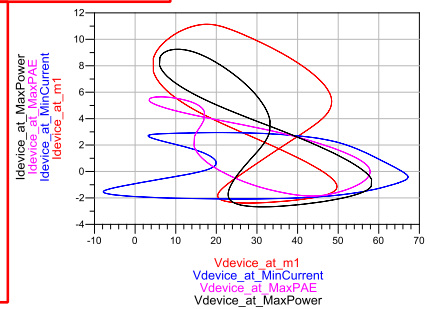

SIMULATED LOAD PULL

Select value of swept variable

SwpIndx2

1.500G 1.500G 1.500G 1.500G 1.500G 1.500G 1.500G 1.500G 1.500G

Swept Variable Values

Source Zs at Fund, 2nd & 3rd Harmonics

0.500 + j0.900

10.00

1.000 k

Load Zs at 2nd & 3rd Harmonics (if sweeping Z at fundamental)

-7.308T - j10.80T

2.756T - j7.892T

Available Source Power, dBm

34.000

Choose desired point on power-delivered-versus-power-added-efficiency curves. Tabular data, black dot on Smith Chart and traces below will be updated.

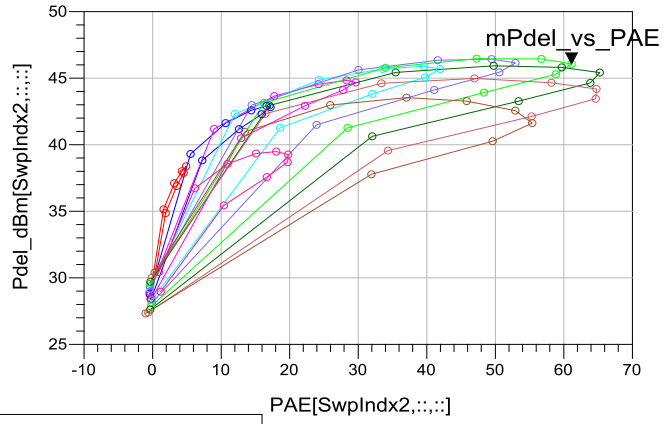

mPdel_vs_PAE
indep(mPdel_vs_PAE)=61.136
plot_vs(Pdel_dBm[SwpIndx2,::,::], PAE[SwpIndx2,::,::])=46.068

Reference Z0 5.000 + j0.000

PAE and Delivered Power Contours

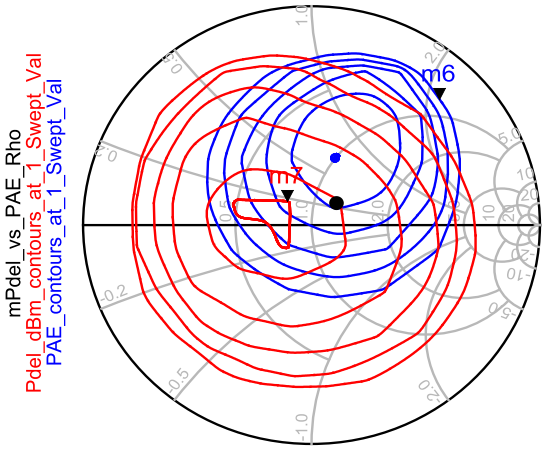

m6
level=40.000, number=11
3.416 + j10.986

m7
level=46.412, number=65
3.963 + j0.872

Data corresponding to marker mPdel_vs_PAE:

BiasCurrent_at_mPdel_vs_PAE	Zload_at_mPdel_vs_PAE	mPdel_vs_PAE_Rho
2.311	6.089 + j1.245	0.148 / 42.420

PAE_at_mPdel_vs_PAE
61.136

Z_In_at_mPdel_vs_PAE
2.630 + j1.400

Gain_at_mPdel_vs_PAE
12.068

Pdel_dBm_at_mPdel_vs_PAE
46.068

Maximum Power and contour levels, dBm:	Maximum PAE and contour levels, %:
46.41	65.181
46.00	60.000
45.00	55.000
44.00	50.000
43.00	45.000
42.00	40.000

Contour levels are specified on "Contours at a Single Value of Swept Param." page.

SIMULATED LOAD PULL

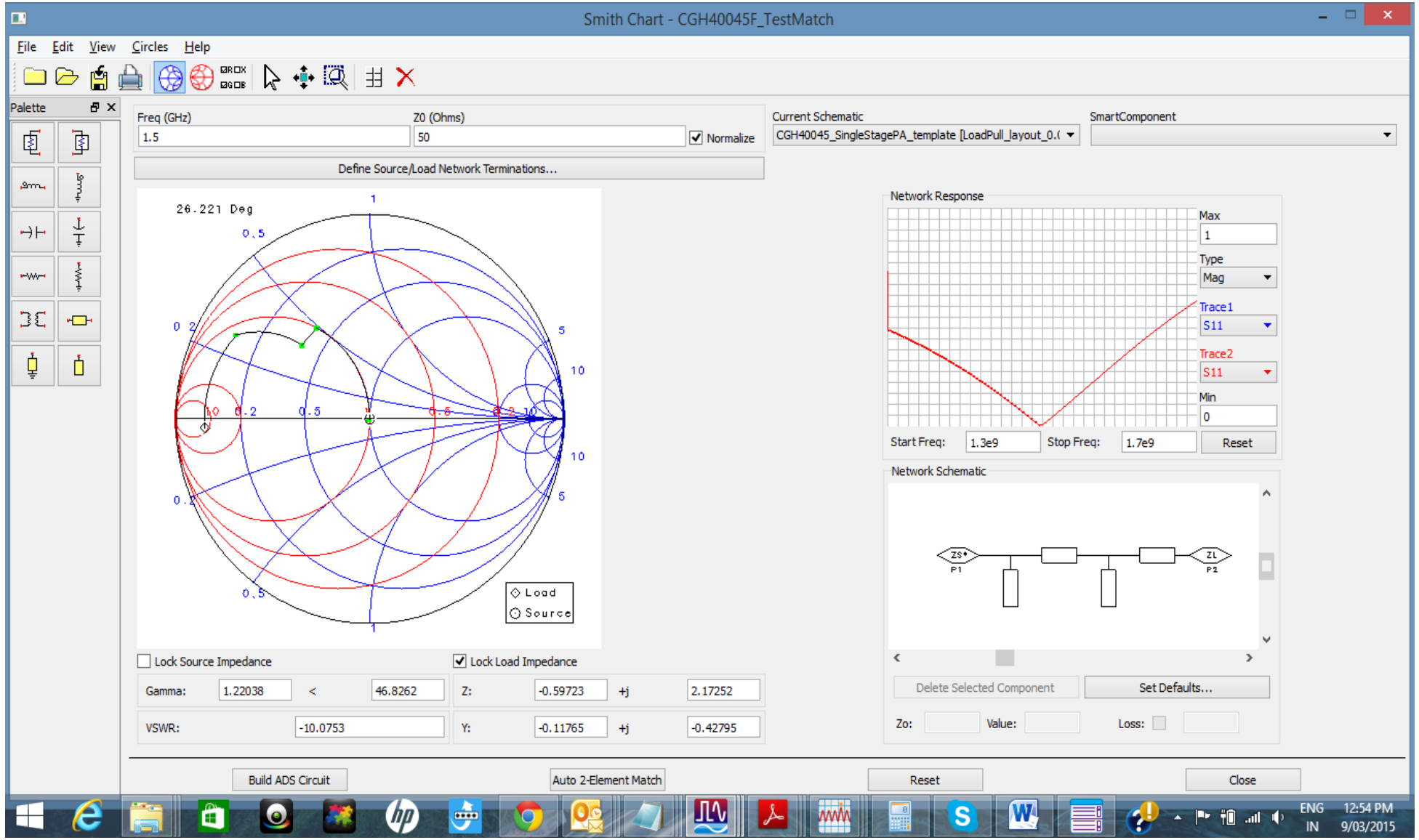

PA MEASUREMENT

- **One tone measurement : AM-AM and AM-PM distortion**
- **Two tone measurement : IMD (typically 30dbc for constant envelope modulation)**
- **ACPR, EVM, CCDF are metrics for Digitally modulated signal**

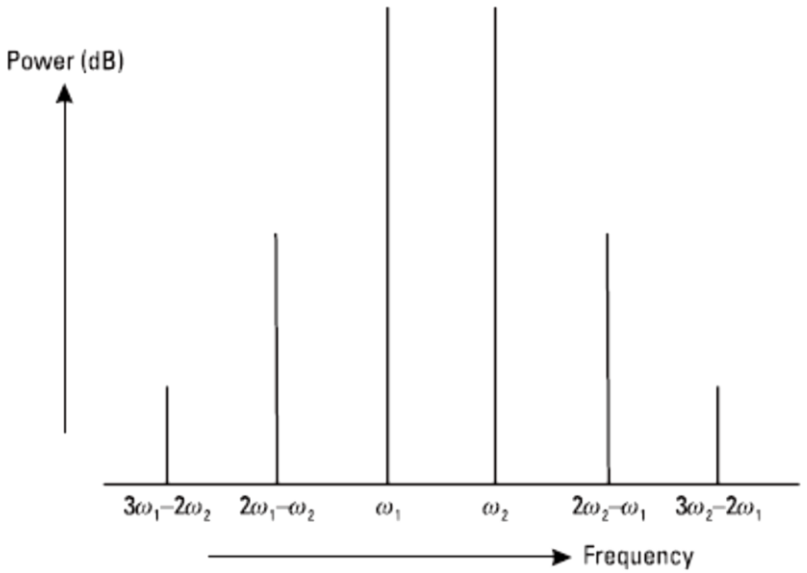

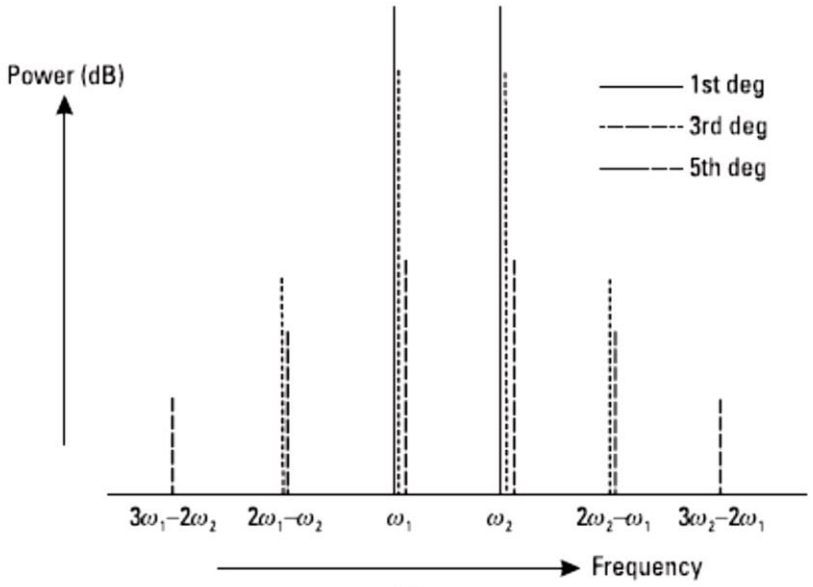

Two Tone IMD Measurement

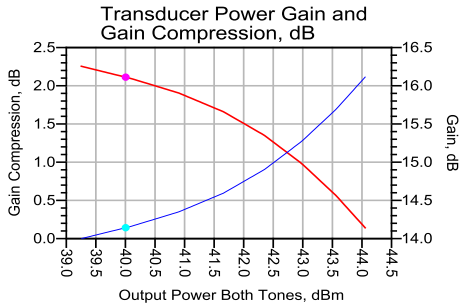

Set Desired_Pout_dBm = to desired output power in dBm. The gain, gain compression and spectral data will be interpolated to find the values that correspond to this output power.

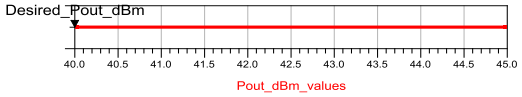

Use with HB2ToneSwptPwr Schematic Template

Fundamental Frequencies

1.549500 G
1.550500 G

Interpolated output power (dBm), gain (dB), and gain compression (dB)

40.004	16.112	0.143

Interpolated Low- and High-Side TOI and 5thOI Points, dBm

50.915	50.978	48.286	48.428

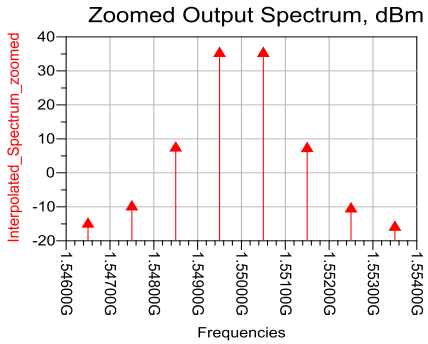

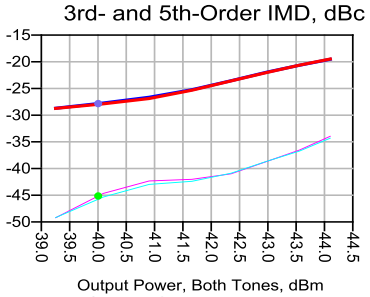

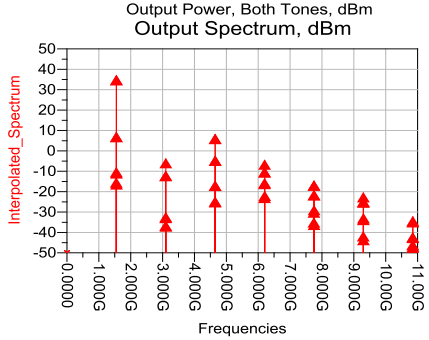

Available Source Power, Both Tones, dBm	Fundamental Output Power, Both Tones, dBm	Transducer Power Gain	Gain Compression dB	Low and High Side Output TOI Points, dBm		Low and High Side Input TOI Points, dBm		Low and High Side Output 5thOI Points, dBm		Low and High Side Input 5thOI Points, dBm	
23.00	39.25	16.25	0.0000	50.60	50.61	34.346	34.356	48.554	48.532	32.300	32.278
24.00	40.09	16.09	159.7 m	50.95	51.02	34.858	34.927	48.253	48.415	32.158	32.320
25.00	40.90	15.90	350.2 m	51.22	51.33	35.317	35.427	48.480	48.632	32.575	32.728
26.00	41.66	15.66	595.2 m	51.27	51.31	35.610	35.650	49.159	49.243	33.500	33.583
27.00	42.35	15.35	903.7 m	51.12	51.13	35.773	35.780	49.595	49.555	34.244	34.204
28.00	42.98	14.98	1.273	50.95	50.97	35.965	35.991	49.646	49.629	34.664	34.647
29.00	43.56	14.56	1.692	50.88	50.86	36.318	36.299	49.688	49.726	35.126	35.164
30.00	44.10	14.10	2.153	50.86	50.83	36.758	36.732	49.586	49.668	35.485	35.567

These become invalid as the amplifier is driven into compression. If the low and high side TOI points do not agree, try increasing the order of each tone and/or the maxorder.

One Tone Measurement

Use with HB1ToneSwptPwr Schematic Template

Output Spectrum, dBm

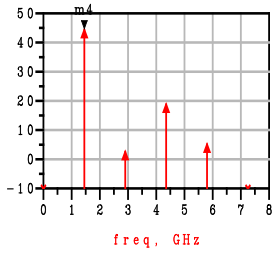

Transducer Power Gain, dB

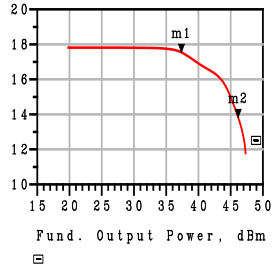

Fundamental and Third Harm., dBm

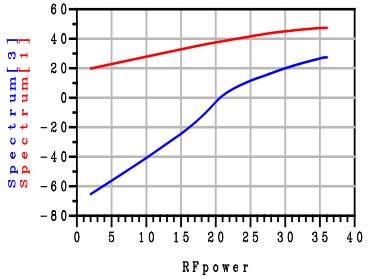

Efficency % and gain

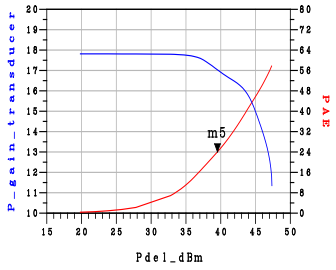

Move Marker m3 to update output spectrum plot.

Available Power Selector

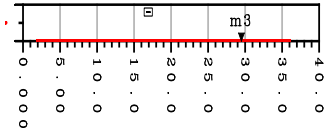

Gain Compression between markers dB: 3.715

Output Power at Marker m2 dBm: 46.16

PAEmax: 57.709

Fundamental Frequency: 1.450...

Available Source Power dBm	Fundamental Output Power dBm	Transducer Power Gain	Second Harmonic dBc	Third Harmonic dBc	Fourth Harmonic dBc	Fifth Harmonic dBc
2.000	19.81	17.81	-73.04	-85.10	-115.3	-149.2
4.000	21.81	17.81	-71.03	-81.06	-109.3	-141.0
6.000	23.81	17.81	-69.00	-76.99	-103.4	-132.7
8.000	25.81	17.81	-66.96	-72.87	-97.39	-124.2
10.00	27.81	17.81	-64.90	-68.67	-91.37	-115.5
15.00	32.79	17.79	-59.52	-57.26	-74.59	-91.82
15.50	33.29	17.79	-58.94	-55.96	-72.54	-89.27
16.00	33.78	17.78	-58.34	-54.60	-70.37	-86.68
16.50	34.27	17.77	-57.72	-53.18	-68.09	-84.06
17.00	34.76	17.76	-57.08	-51.67	-65.71	-81.39
17.50	35.24	17.74	-56.39	-50.07	-63.22	-78.68
18.00	35.72	17.72	-55.65	-48.37	-60.63	-75.93
18.50	36.19	17.69	-54.83	-46.55	-57.96	-73.14
19.00	36.65	17.65	-53.91	-44.61	-55.23	-70.32
19.50	37.09	17.59	-52.85	-42.57	-52.47	-67.50
20.00	37.51	17.51	-51.65	-40.46	-49.79	-64.82

Available Source Power dBm	Gain Reduction dB	Delta Phase Shift degrees
2.000	0.000	0.000
4.000	-7.17...	0.012
6.000	-2.34...	0.031
8.000	-0.001	0.061
10.000	-0.002	0.110
15.000	-0.019	0.409
15.500	-0.024	0.466
16.000	-0.032	0.530
16.500	-0.042	0.603
17.000	-0.055	0.687
17.500	-0.072	0.784
18.000	-0.095	0.897
18.500	-0.126	1.029
19.000	-0.168	1.188

Use these values in GComp7 section of S2D data file, with option line:

#[0] AC(GHZ S DBM DB R 50.0)

Eqn Spectrum=dBm(vload,Zload[0]) Eqn P_gain_transducer=Spectrum[1] Eqn Phase_delta=phase(vload[1])-phase(vload[0,1])

Eqn TOIoutput=1.5*Spectrum[1]-0.5*Spectrum[3] Eqn PAE=100*(TOIoutput-P_gain_transducer) Eqn Gain_Reduction=P_gain_transducer-P_gain_transducer[0]

ACPR WCDMA (PAR 6db)

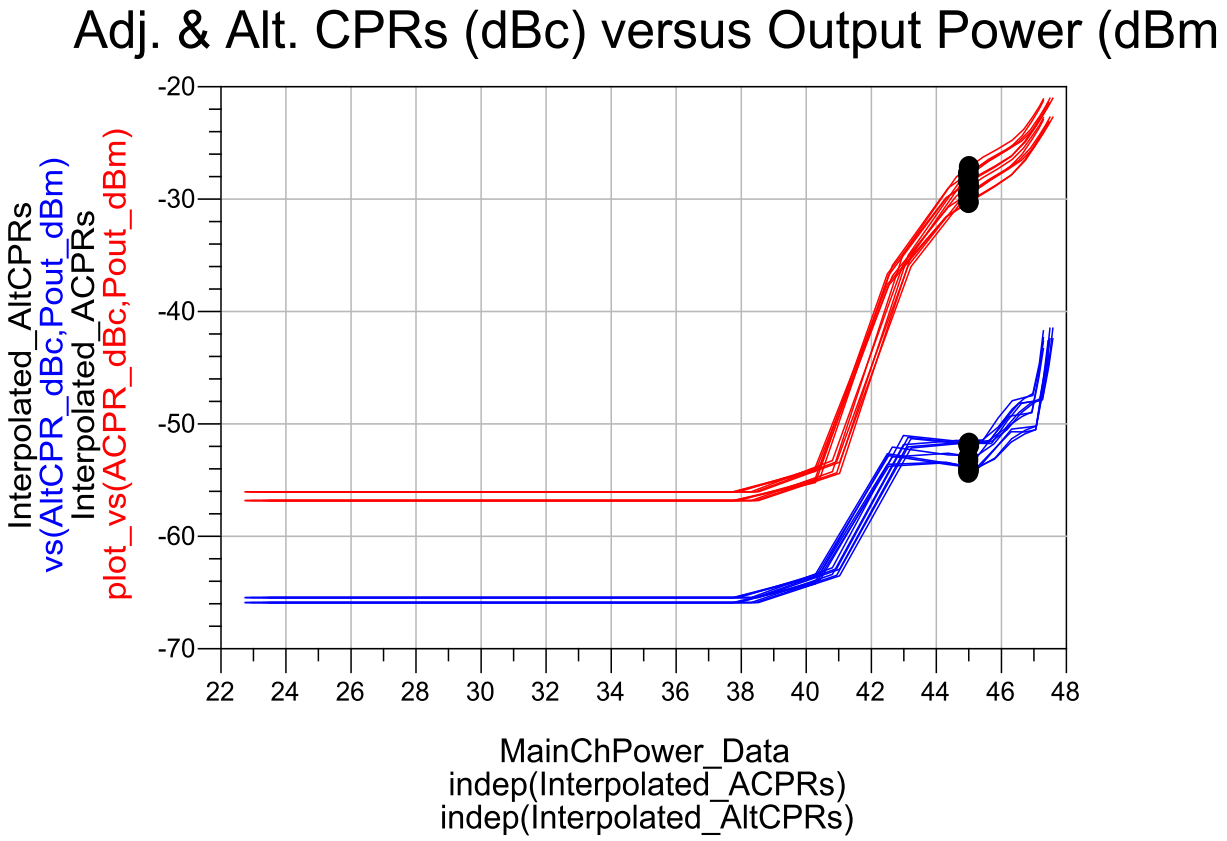

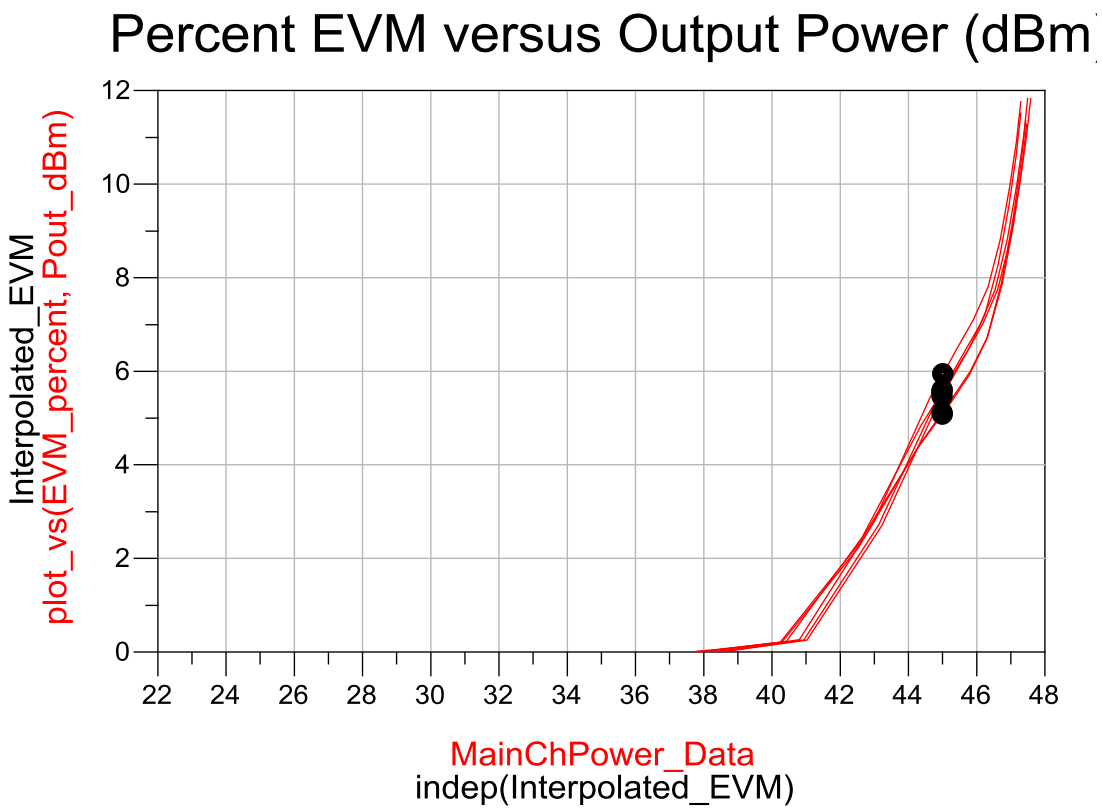

PA EFFICIENCY ENHANCEMENT TECHNIQUES

Presented by
Bhupinder Singh

Finetuning Academy

RF & Wireless matters

Introduction

- Modern Communication systems demand high PAR
- High Efficiency
- Multiband –Multi standard operation
- Better linearity

- *DOHERTY POWER AMPLIFIER*
- *ENVELOPE ELIMINATION AND RESTORTION*
- *BIAS ADAPTION*

DOHERTY PA

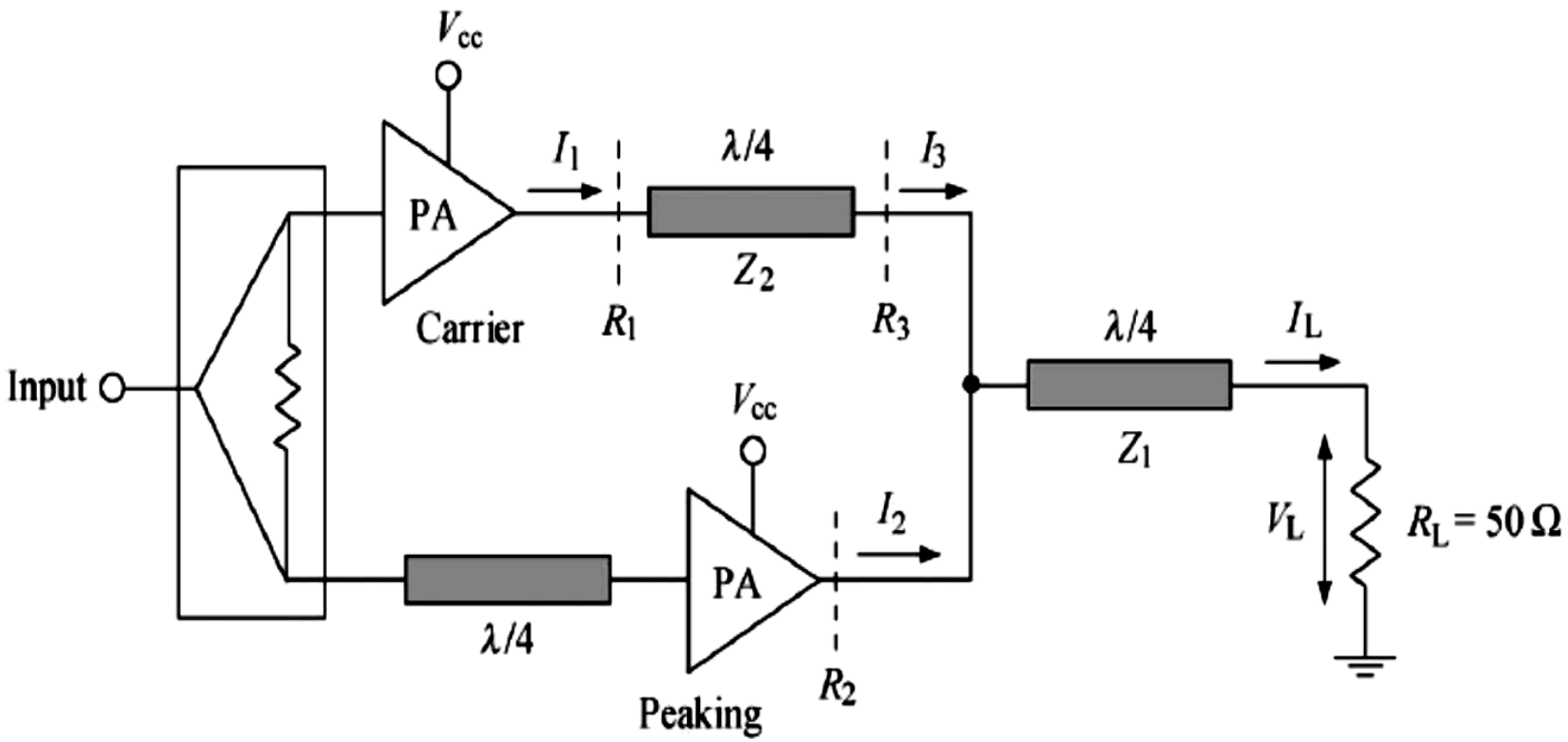
V_{cc}
PA
Carrier
I_1
R_1
λ/4
Z_2
I_3
R_3
Input
λ/4
Z_1
I_L
V_L
$R_L = 50\,\Omega$
V_{cc}
PA
Peaking
I_2
R_2
λ/4

ENVELOPE ELIMINATION AND RESTORTION

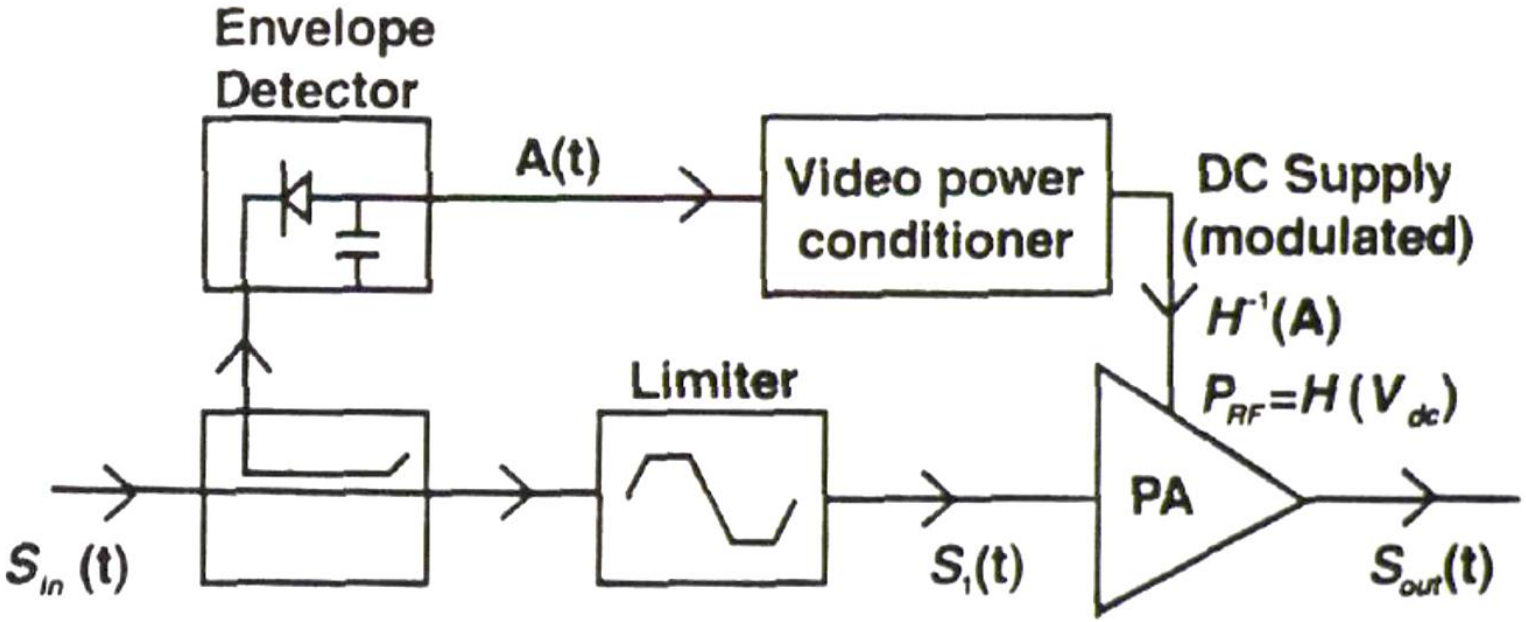

BIAS ADAPTION

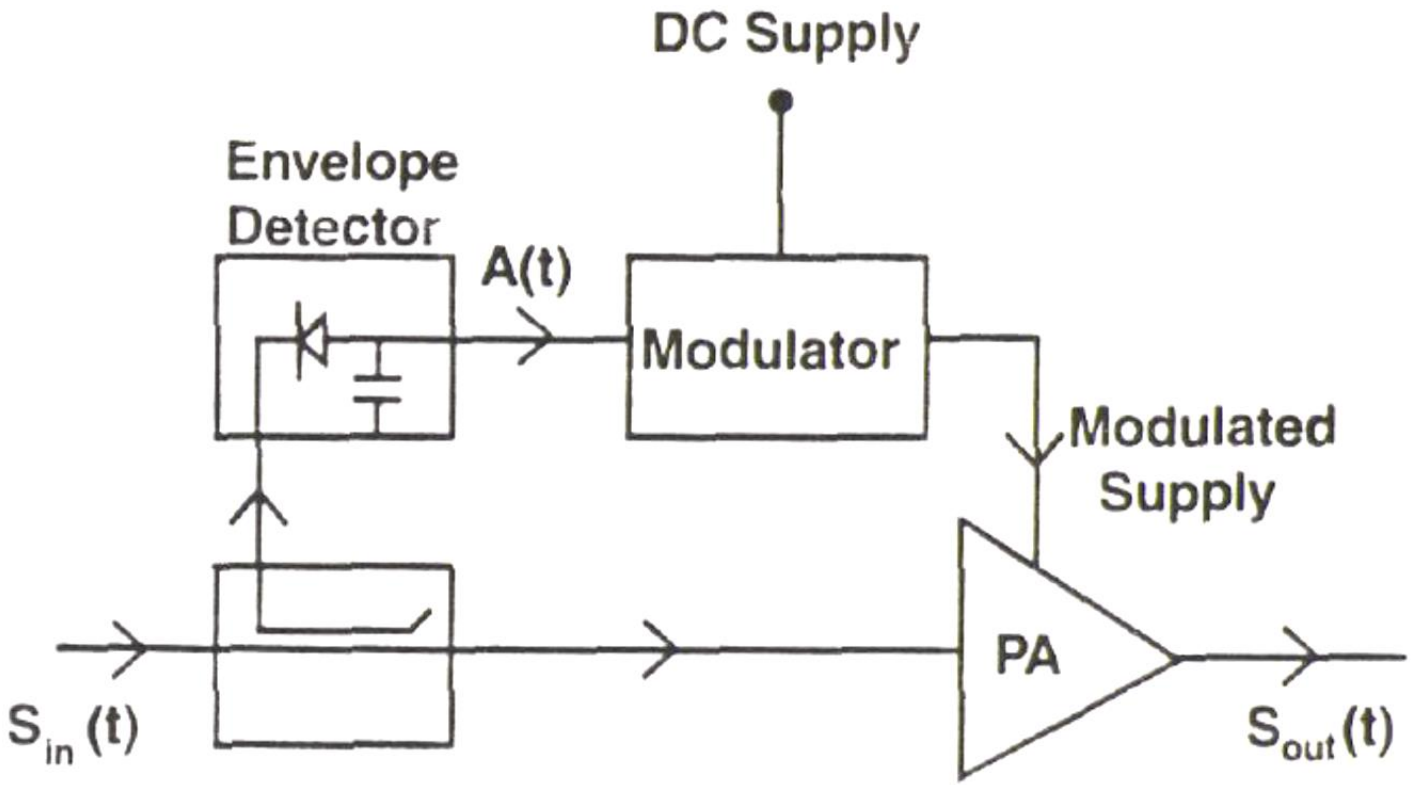

Ideal Class B Amplifier

- Ideal efficiency value 78.5% at maximum power output
- Efficiency decreases as the input drive level is reduced
- η= Pi/4*p ; p is the reduction in input voltage drive
- Increase the load resistance by same factor p its possible to return to ideal efficiency value of 78.5%

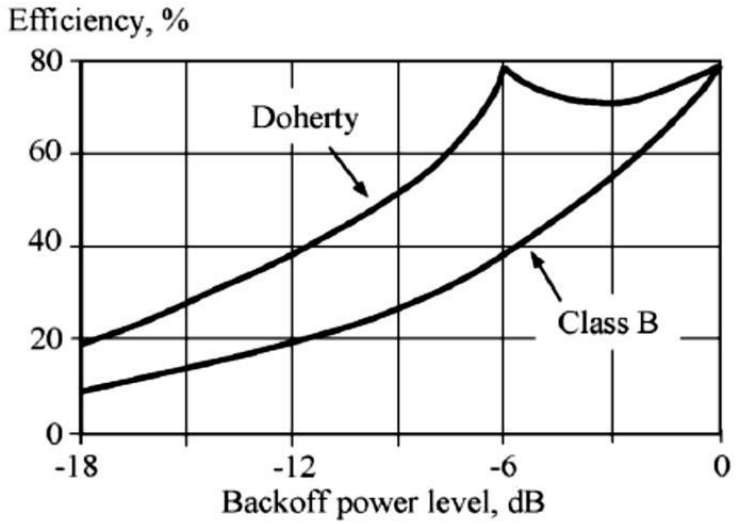

Conventional Doherty PA

- Active load pull concept, dynamically alters the load resistance for maximum efficiency
- Extends high efficiency operation to lower power levels
- $Z_1 = R_L * (1 + \frac{I_2}{I_1})$

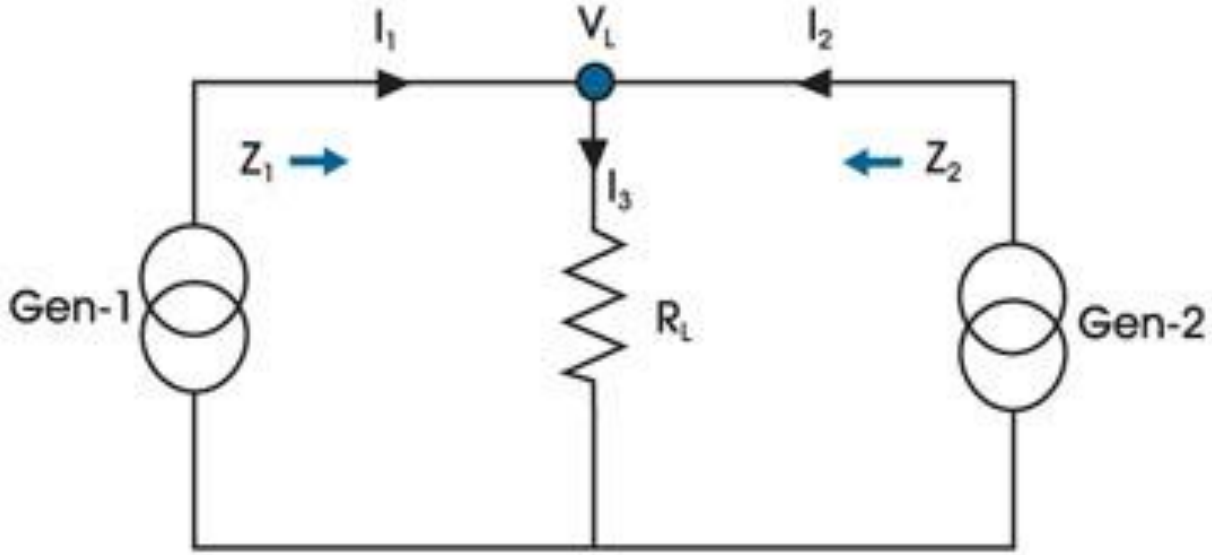

Conventional Doherty PA

- Three distinct operating regions are defined for DPA
- Low Drive region: Carrier amp conducting Peaking amp OFF
- Load Modulation Region: Carrier saturated Peaking turning ON
- Peak Power Region: Carrier and Peaking amplifiers saturated

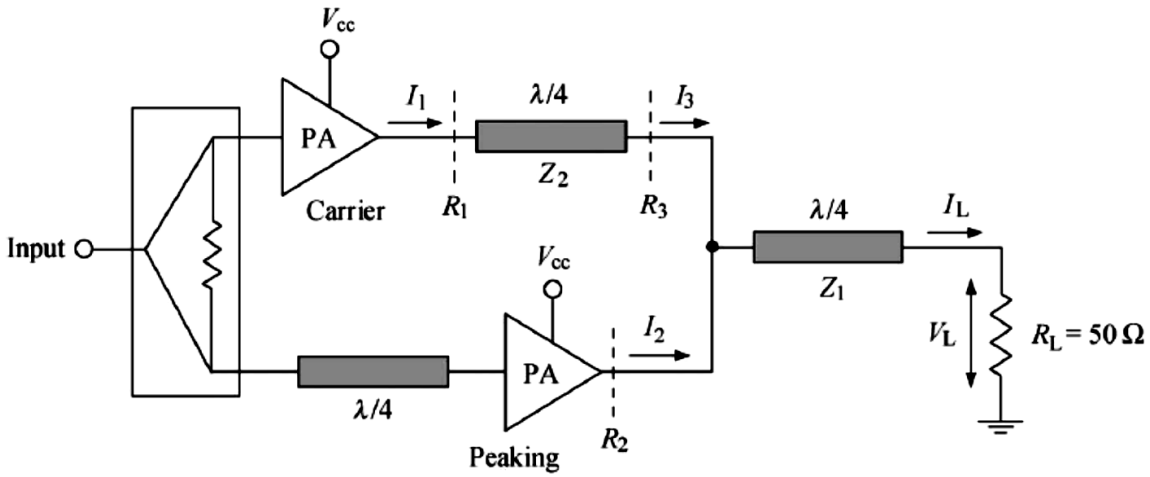

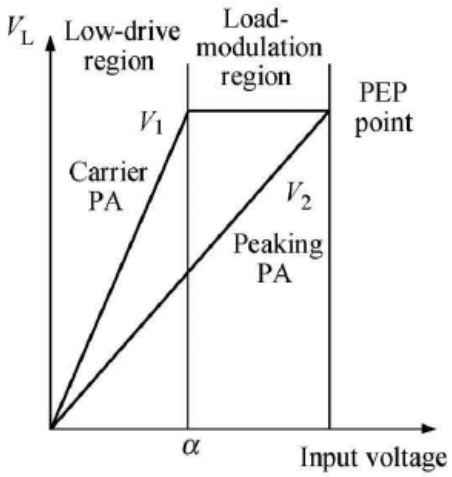

Conventional Doherty PA

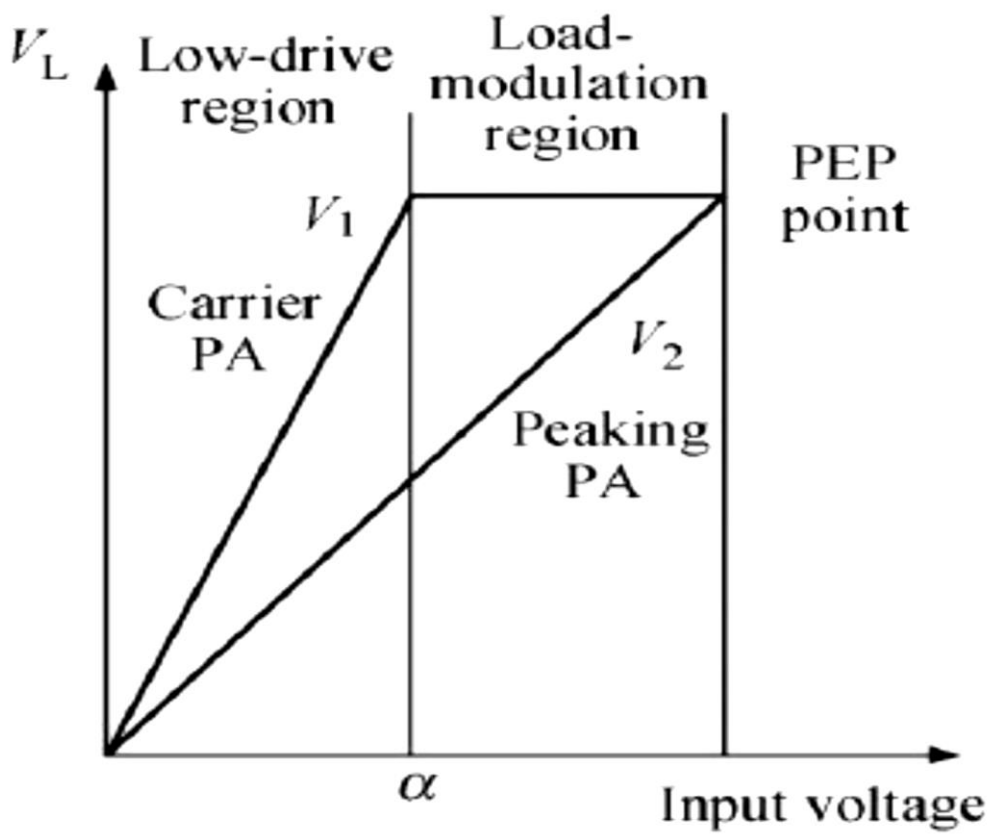

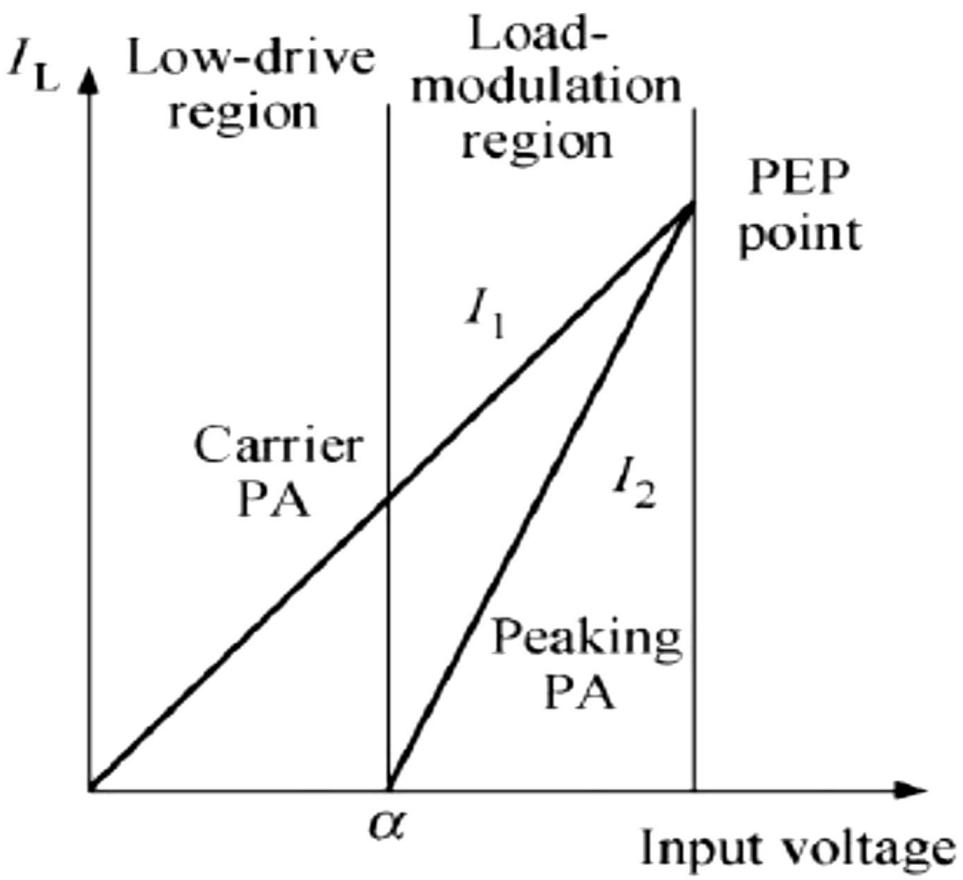

Theory of operation

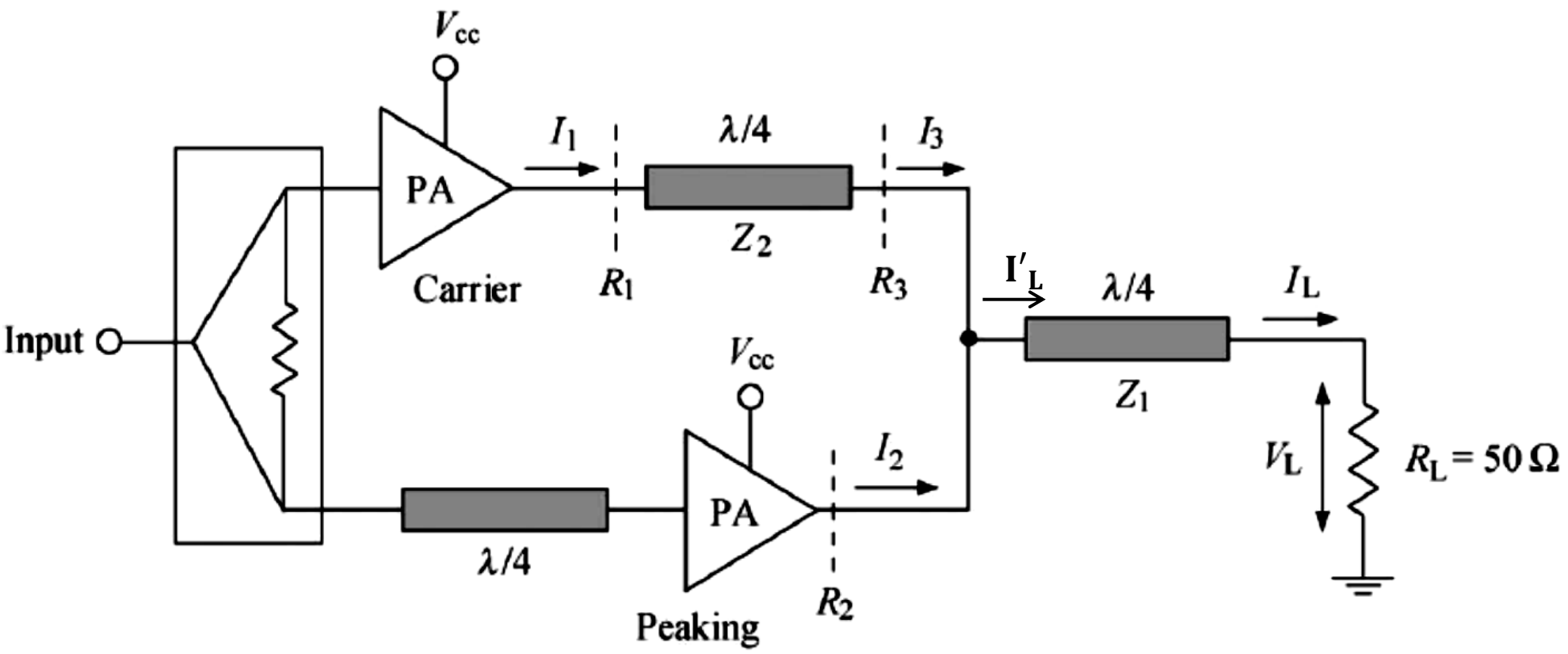

Theory of operation

- $I_3 = I_1\sqrt{\frac{R_1}{R_3}}$ ----(1)
- $I_3 = \frac{R_2}{R_2+R_3} I'_L$; $I_2 = \frac{R_3}{R_2+R_3} I'_L$
- $I'_L = I_2 + I_3 = I_3(\frac{I_2}{I_3}+1) = \frac{I_3}{\beta}$; where β is the current division ratio

Theory of operation

impedance seen at the output of the Carrier amplifier is

- $R_3 = \frac{I_3+I_2}{I_3}\frac{Z_1^2}{R_L} = \frac{Z_1^2}{\beta R_L}$ (2)

And the impedance seen at the output of the Peaking amplifier is

- $R_2 = \frac{I_3+I_2}{I_2}\frac{Z_1^2}{R_L} = \frac{Z_1^2}{(1-\beta)R_L}$ (3)

Theory of operation

- **Case-1 (Symmetric Doherty)**

current and power division ratios of α=β=0.5

$R_1 = R_2 = R_3 = Z_2 = \frac{2Z_1^2}{R_L}$ in Peak Power Region

- for Z_1=35 **Ω** and R_L=50 **Ω**
- $R_1 = R_2 = R_3 = Z_2$ = 50 **Ω**
- In low power region

$R_1 = \frac{Z_2^2}{Z_1^2} R_L$=100 **Ω** (6db back-off)

Theory of operation

- **Case-2 (Asymmetric Doherty)**

current and power division ratios of α=β=0.25

$R_1 = Z_2 = R_3 = 3R_2$; in Peak Power Region

for Z_1=15 $\mathbf{\Omega}$ and R_L=50 $\mathbf{\Omega}$

- $R_1 = Z_2$=18 $\mathbf{\Omega}$; $R_2 = R_3/3 = 6\ \mathbf{\Omega}$
- In low power region

$R_1 = \frac{Z_2^2}{\boldsymbol{\beta} R_3} = 72\mathbf{\Omega}$ (12db back-off)

Limitations of Conventional DPA

- In the low power region, the assumption of Peaking Amplifier being open is difficult to achieve
- The power splitter and combiner at the input and output of the DPA are inherently narrowband due to the presence of lambda by four transformers
- The Peaking and Carrier amplifiers are to be designed using wideband matching techniques

Modified DPA

- Simple modifications to improve operating BW of Conventional DPA
- 30% operating BW centered around 1450MHz till 6db back-off
- Cree CGH40045 GaN transistor for Carrier (Class AB) and Peaking Amplifier (Class C)
- Symmetric DPA structure
- Better than 30% efficiency over full BW and 6-db Back-off range

Modified DPA

- The Carrier and Peaking amplifier were designed over a broad range of frequencies 1.2GHz-1.8GHz. ADS simulations were carried out to check and optimize the performance of Carrier and Peaking amplifier over this frequency range
- Replacing the 50 ohms impedance inverter at the output of Carrier amplifier by a 70 Ohms impedance inverter, inserting another 70 ohms impedance inverter at the Peaking amplifier output and removing the 35 ohms Impedance transformer at the load. The load is now directly connected at the junction of two 70 Ohms impedance inverters.

Modified DPA

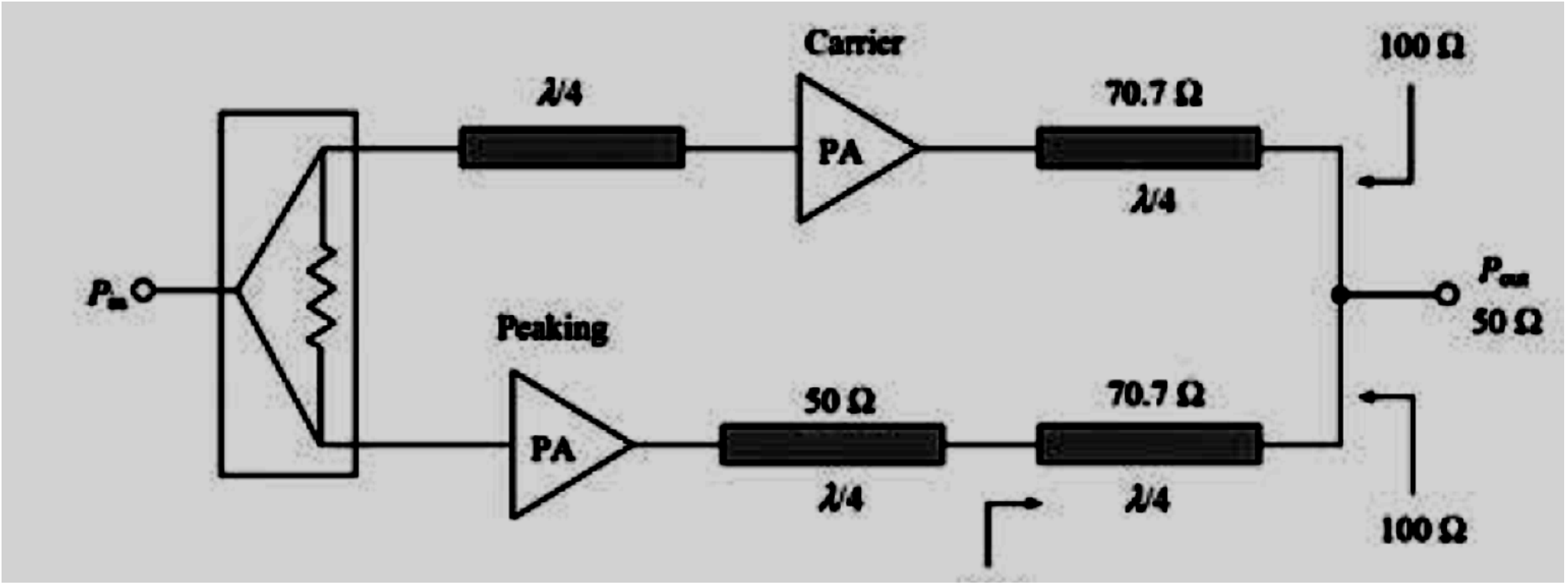

Modified DPA

- The relatively smaller impedance step (from 50 ohms to 100 ohms) at the output of Carrier amplifier improves the BW by a factor of 1.73.
- The power splitter at the input is a modification of Branch line hybrid where additional lambda by four sections are included to make it operate over octave band (1G-2G) without changing its size appreciably
- Offset delay lines were included at the output of the Carrier and the Peaking amplifier

Modified DPA

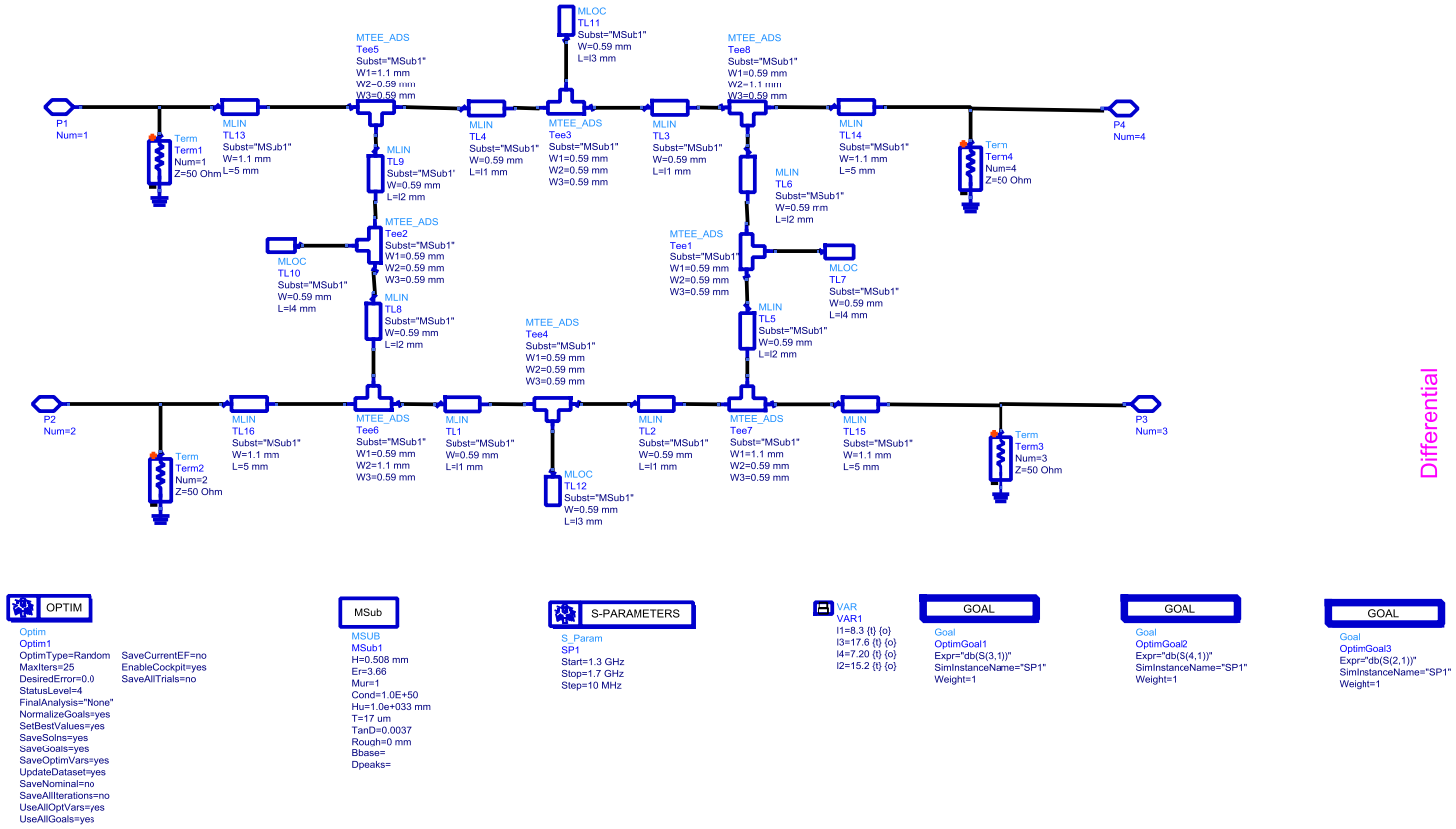

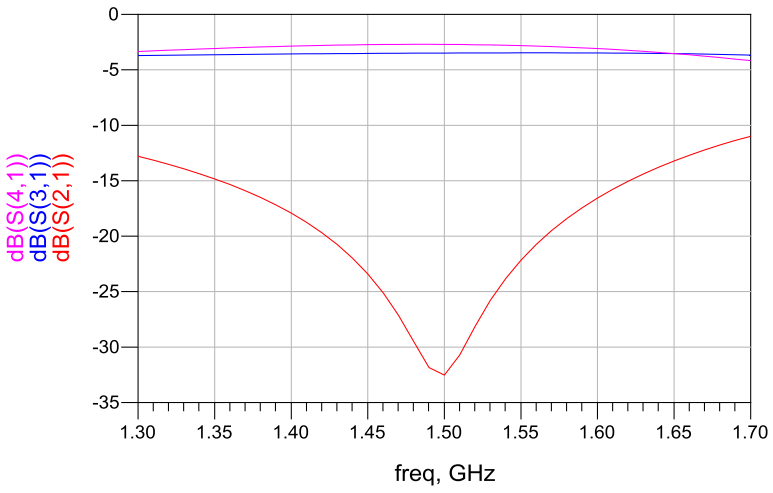

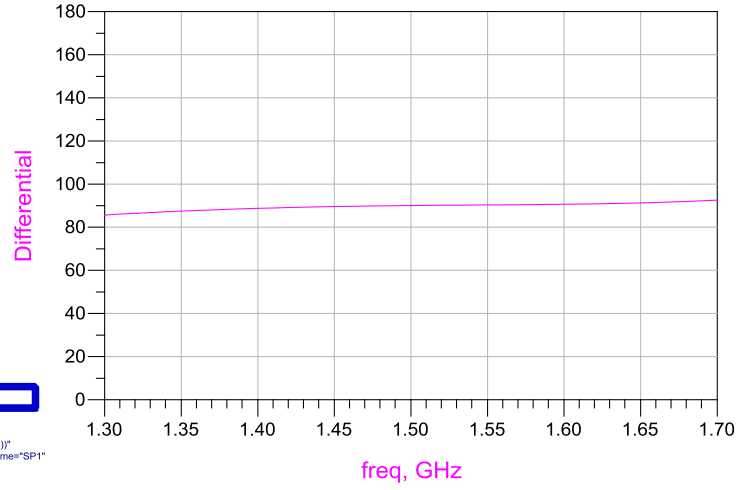

Eqn Differential=(unwrap(phase(S(4,1)))-unwrap(phase(S(3,1))

Modified DPA

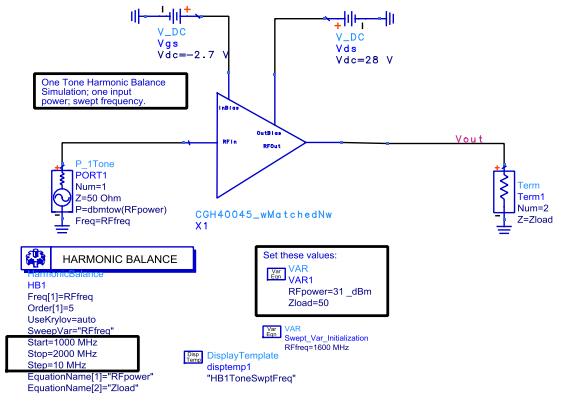

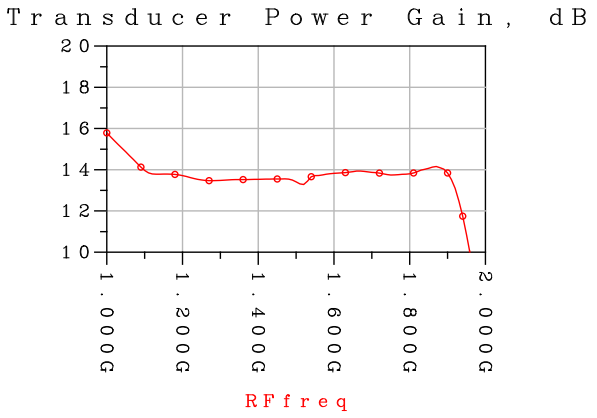

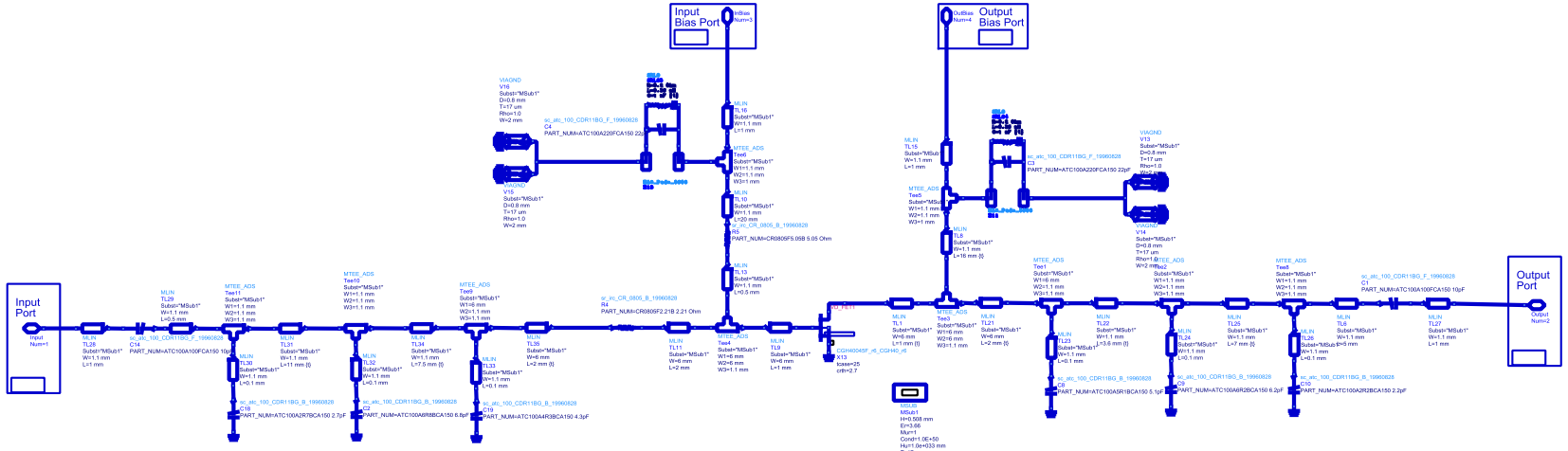

Modified DPA

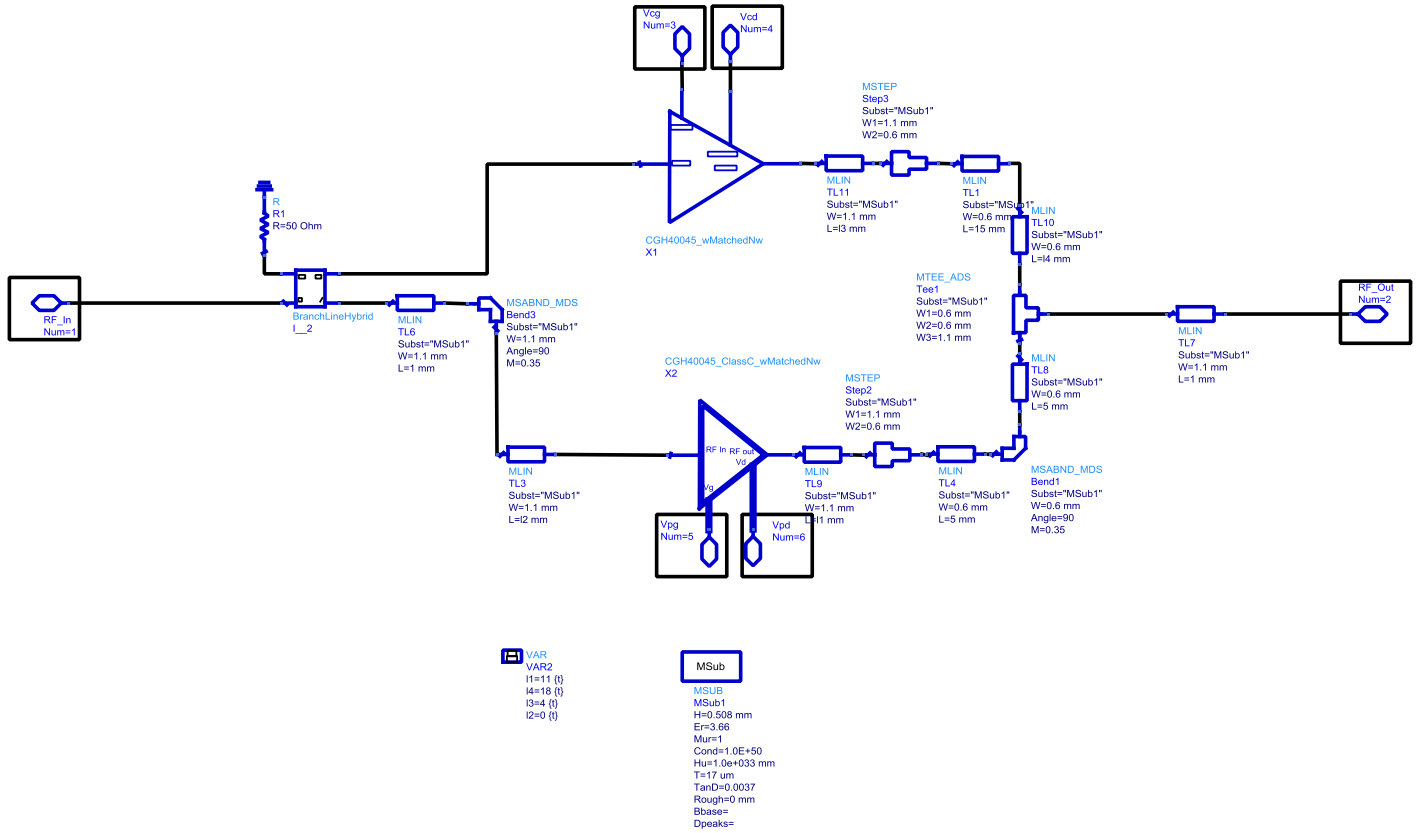

DISCUSSION OF SIMULATION RESULTS

- Modified DPA delivers good efficiency over a broad BW
- Demonstrates Linearity improvement over Class AB amplifier
- Suffers from BW limitation of output combiner
- Further improvement possible by designing a wideband output combiner to covet the entire 0.8G to 2.7G cellular band

Result Discussion

Fundamental Frequency: 1.450 GHz

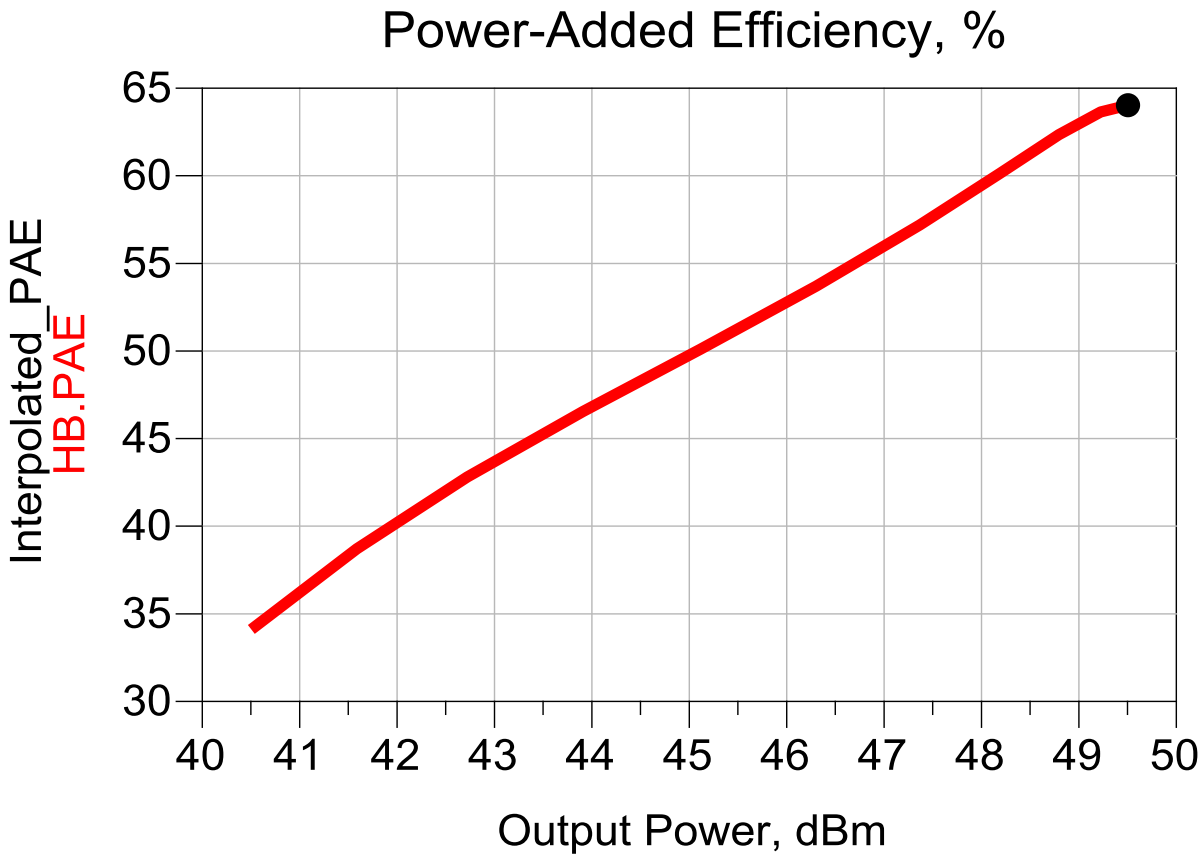

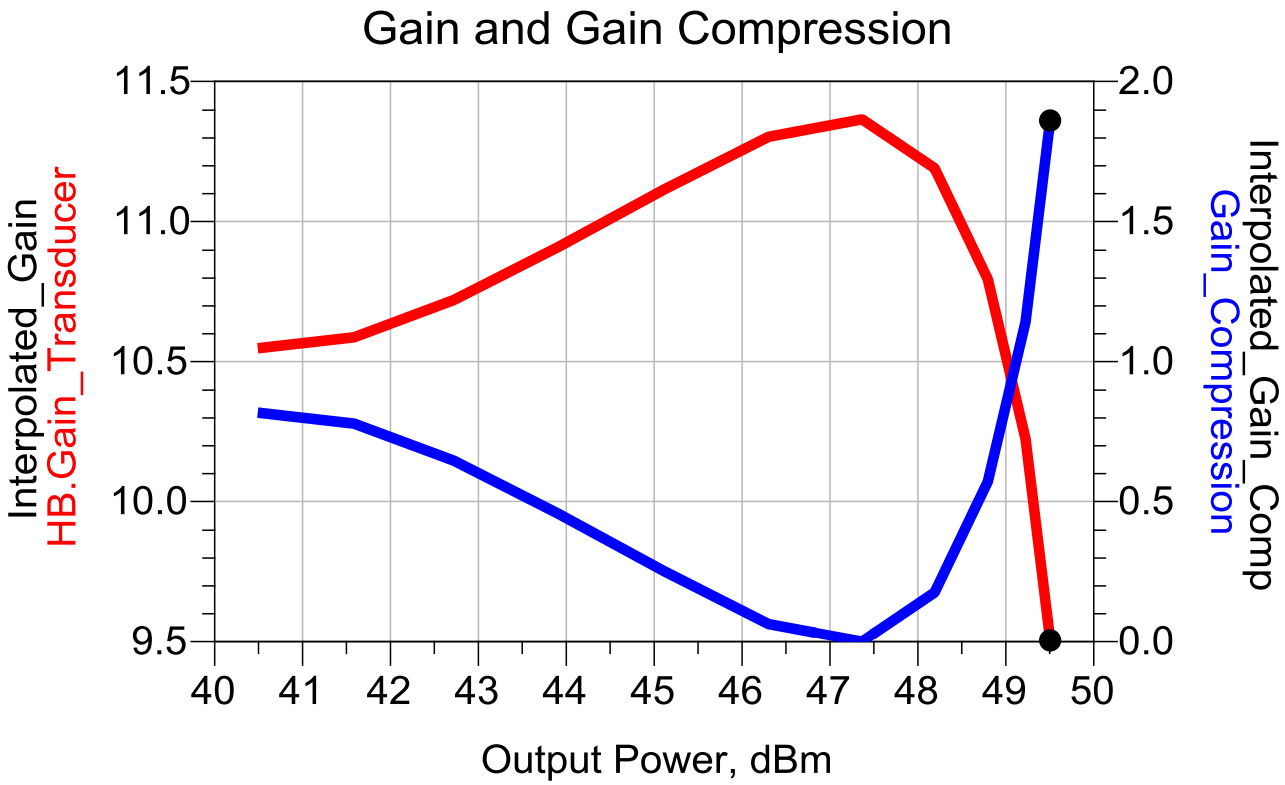

Result Discussion

Fundamental Frequency 1.650 GHz

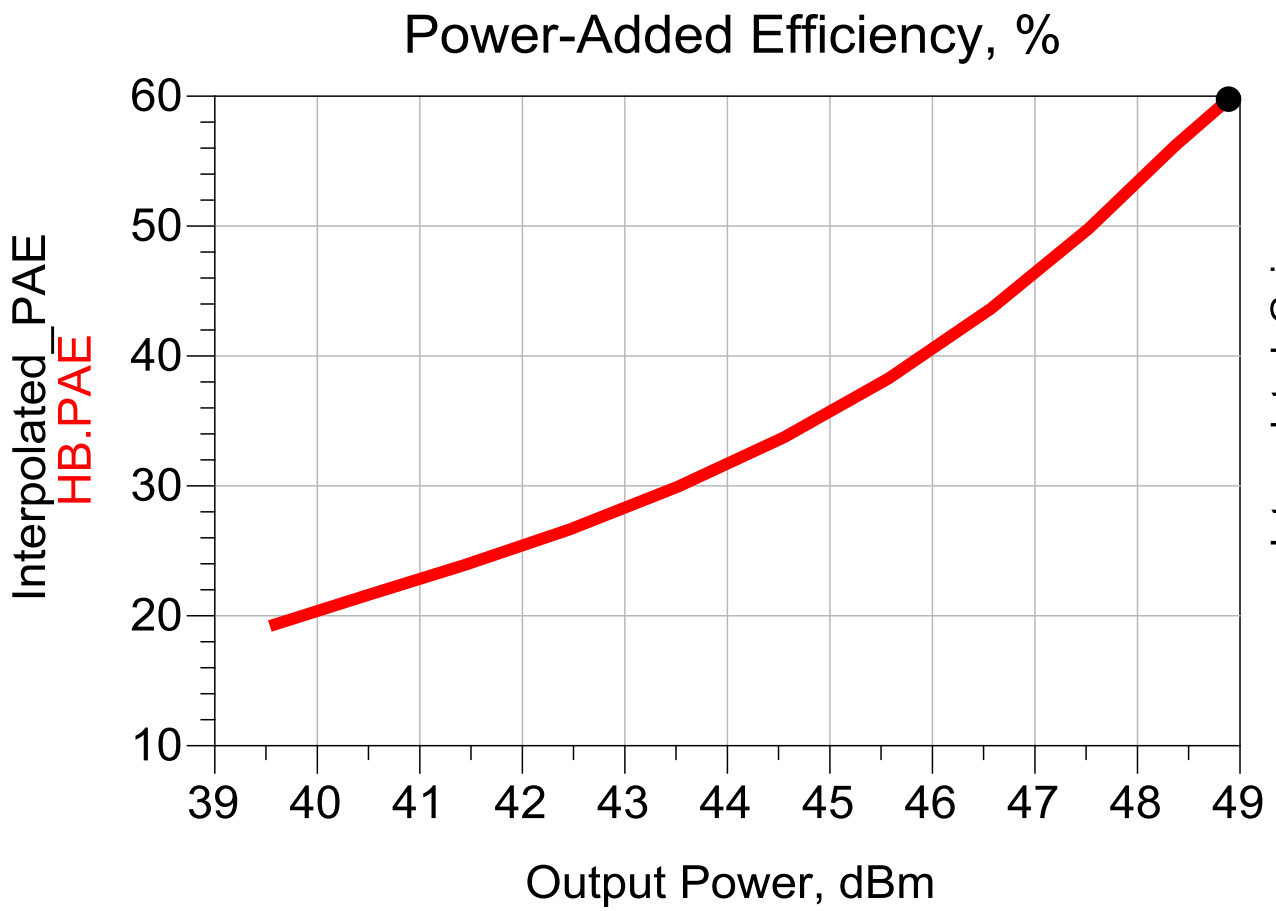

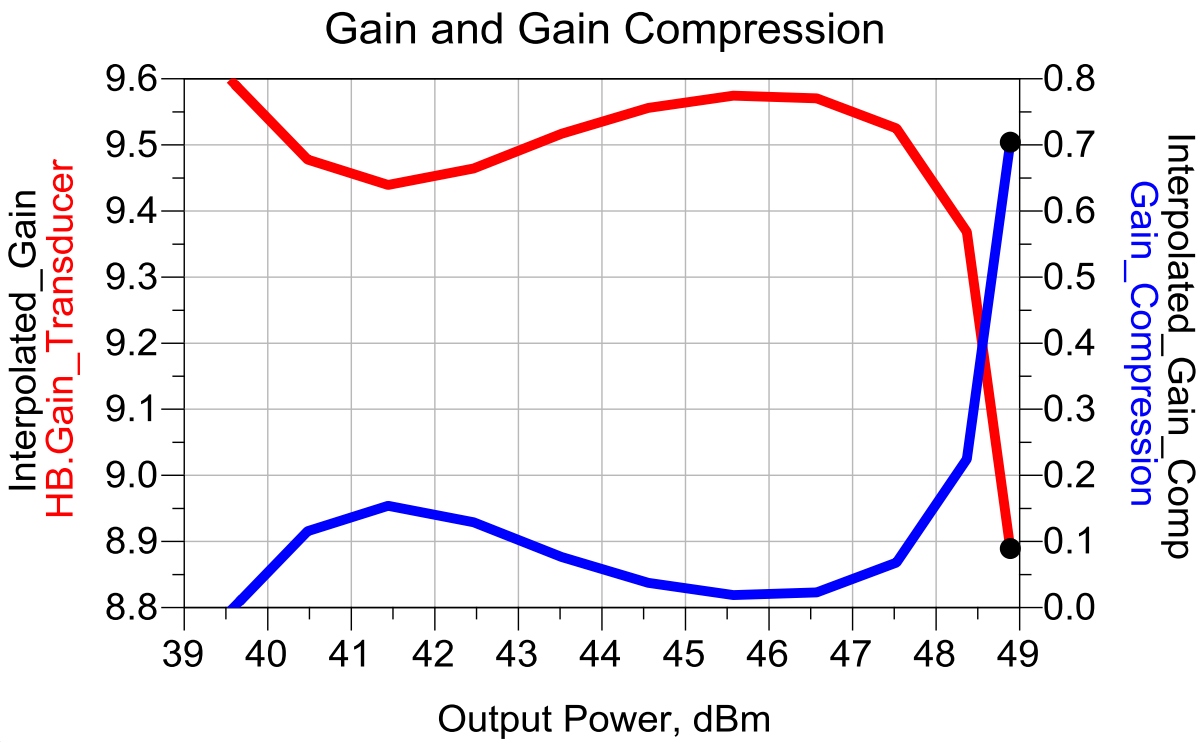

Result Discussion

Fundamental Frequency: 1.250 GHz

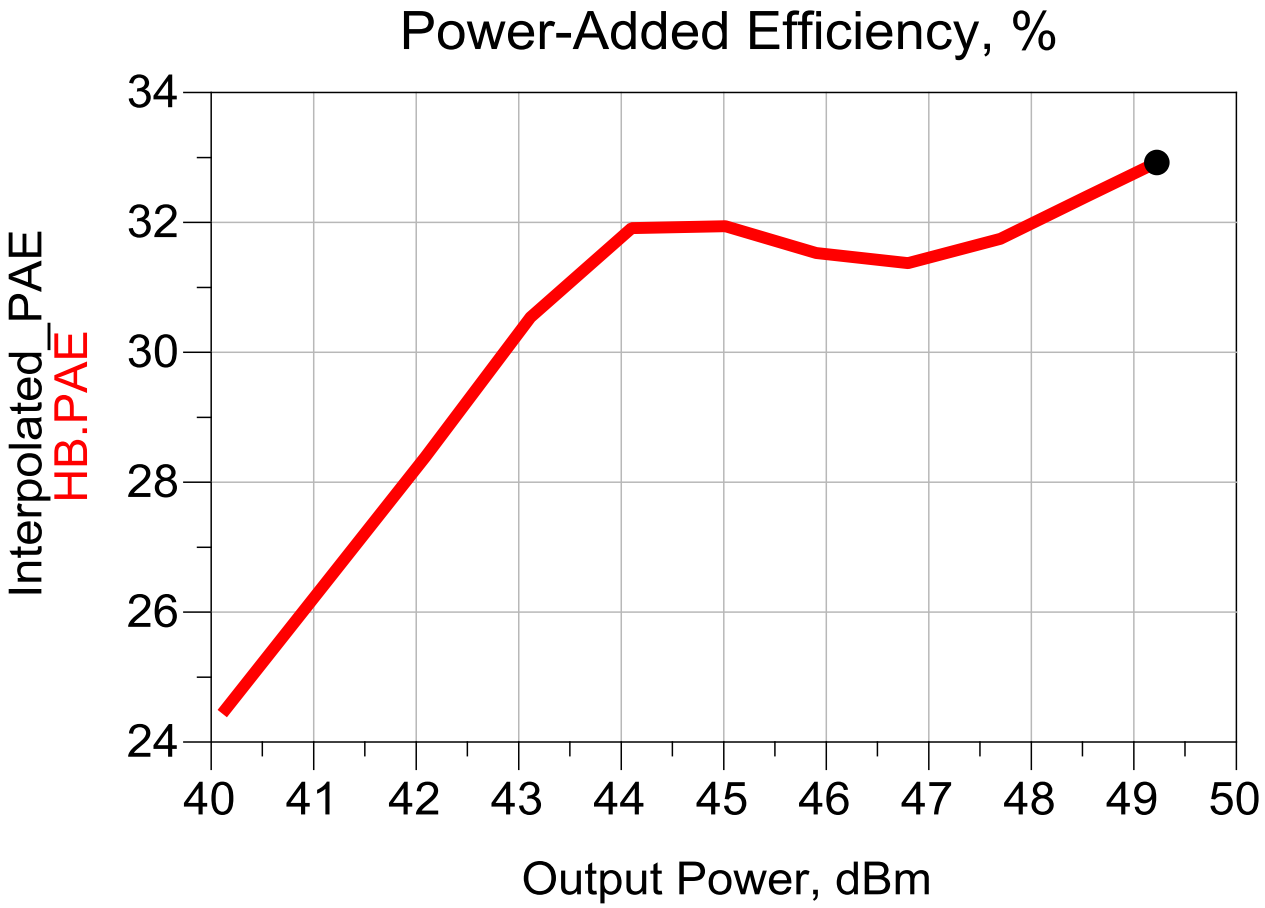

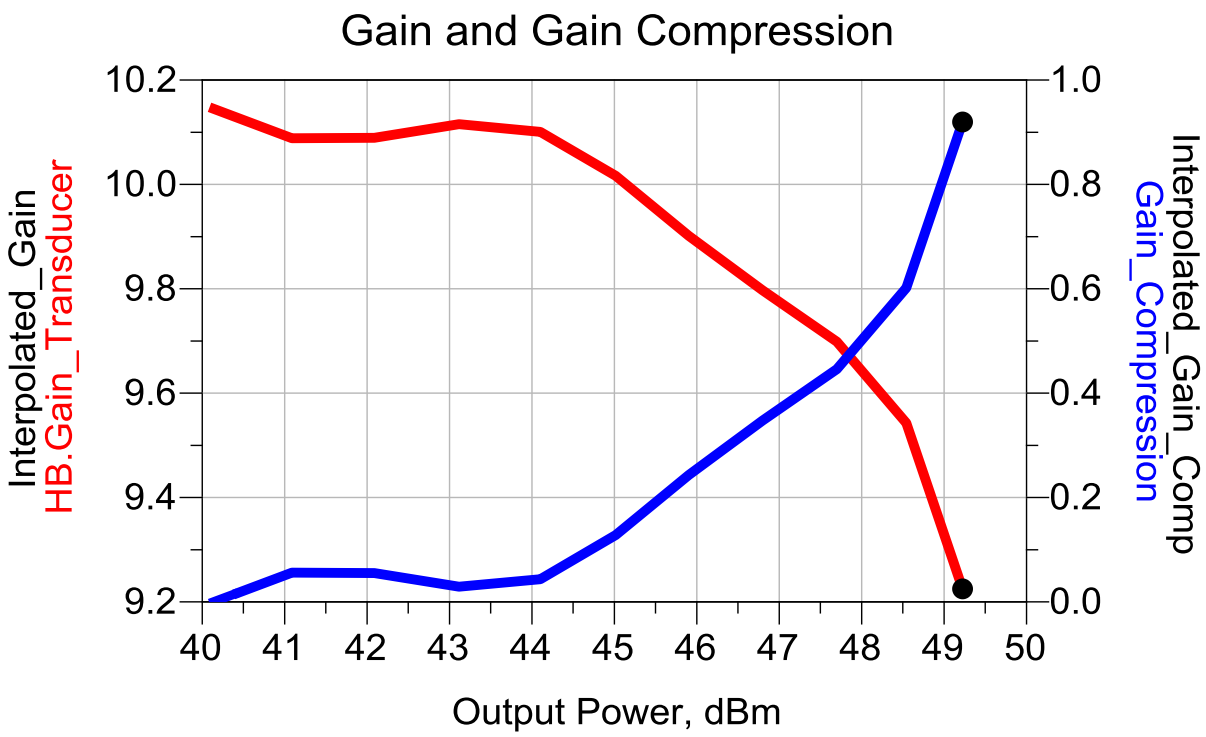

Result Discussion

ACPR RESPONSE OF MODIFIED DPA

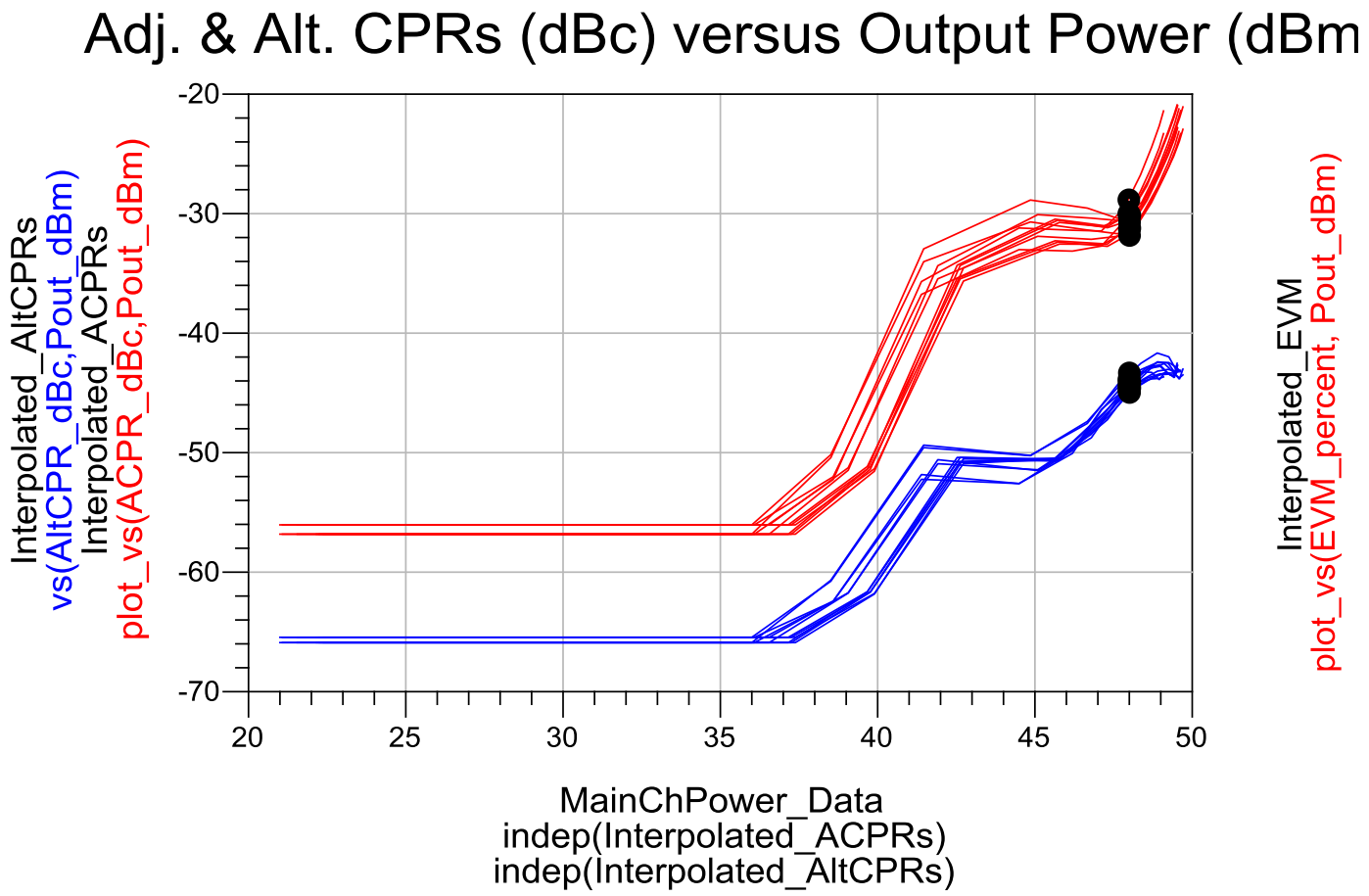

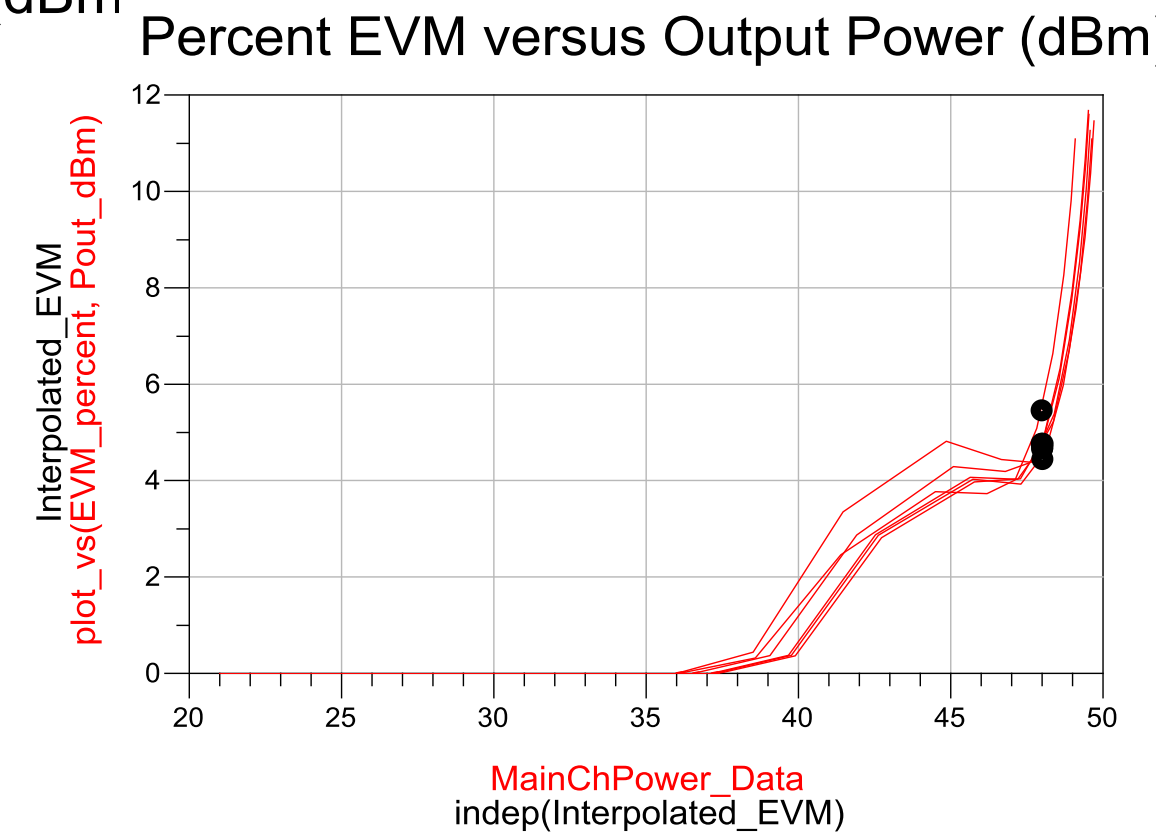

Result Discussion

ACPR RESPONSE OF CLASS AB PA

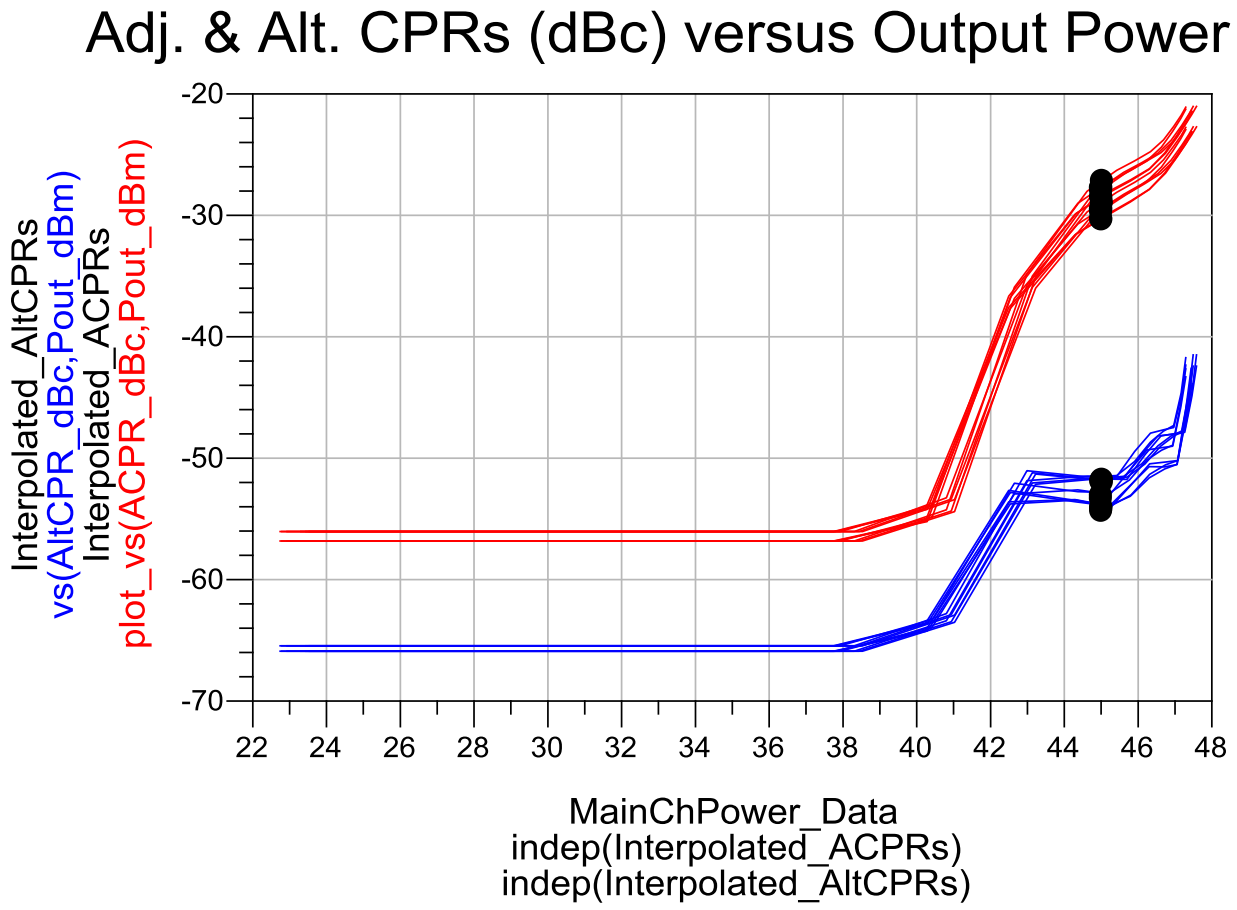

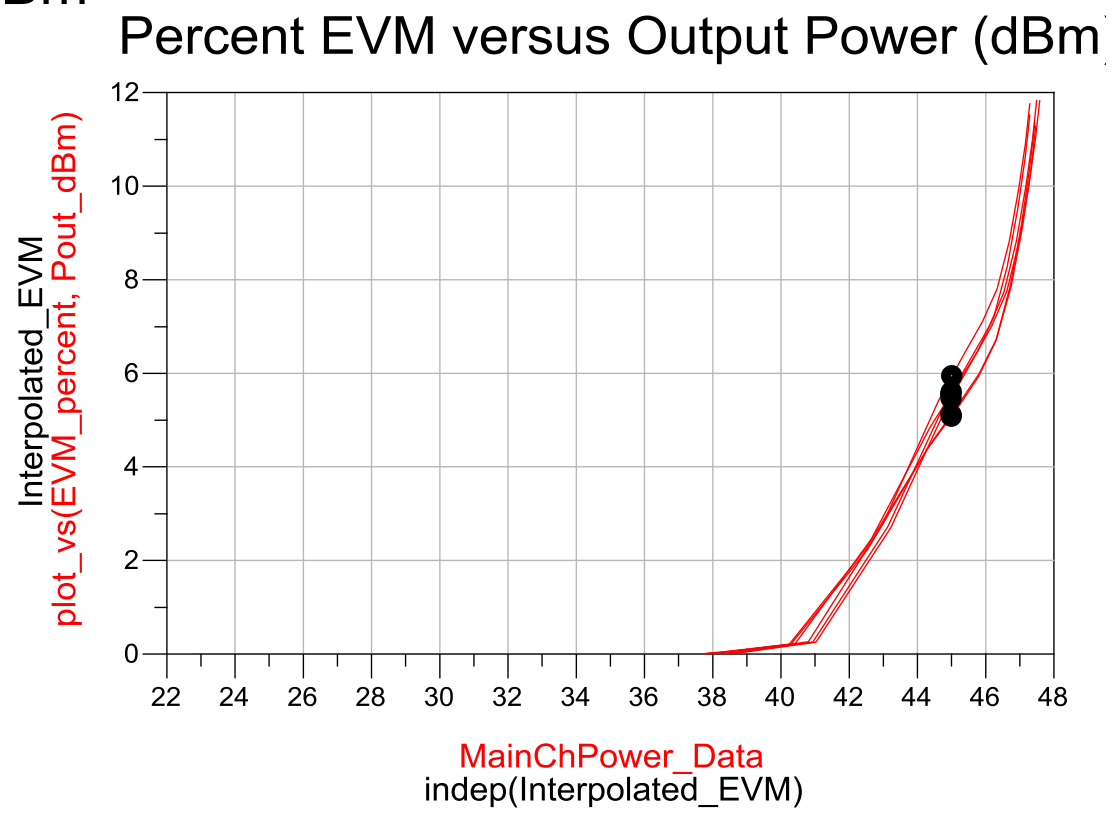

POWER AMPLIFIER LINEARIZATION TECHNIQUES

Presented by
Bhupinder Singh

Finetuning Academy

RF & Wireless matters

PA CHARCTERIZATION

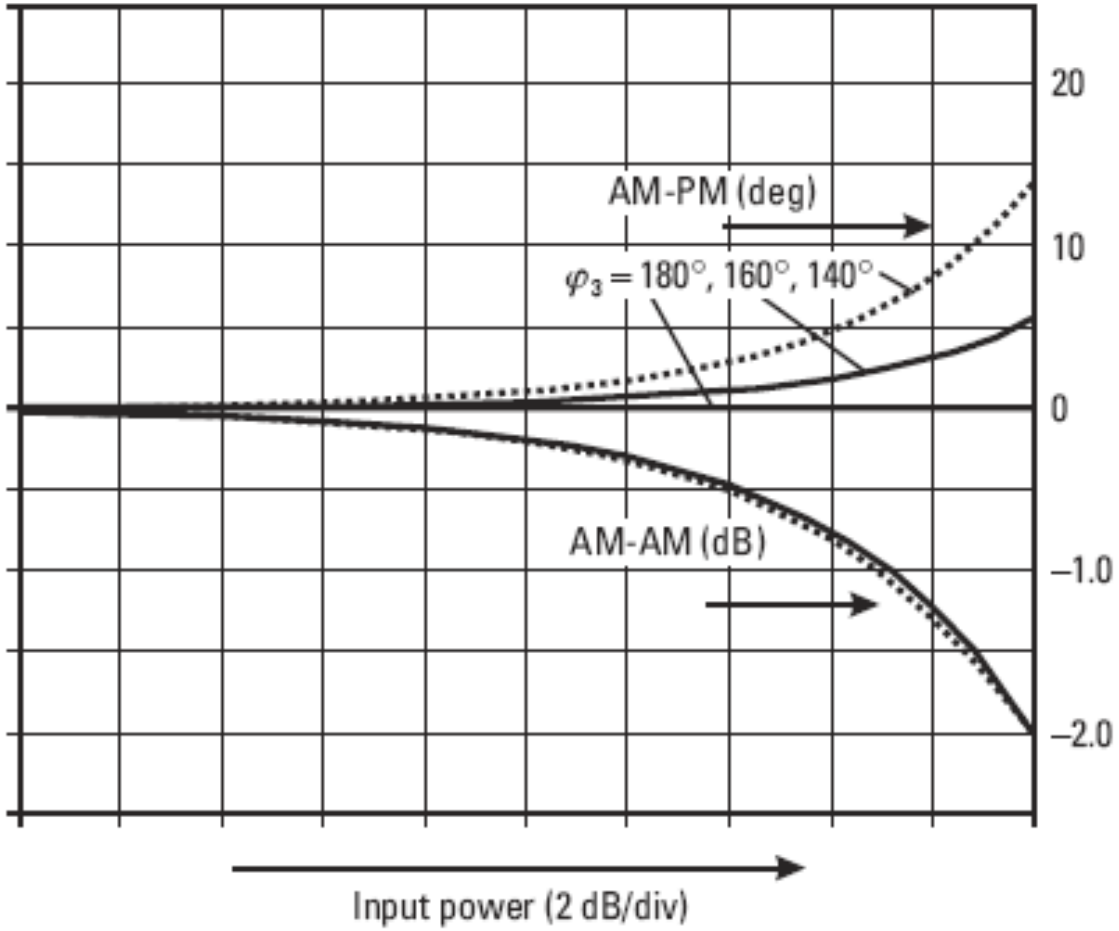

$$v_o(t) = a_1 v_i(t) + a_3 v_i^3(t) + a_5 v_i^5(t)$$

- PAs differ in values of coefficients a_3 and a_5 resulting in different looking AM-PM curves
- Coefficients a_3 and a_5 are higher for amplifier with higher AM-PM distortion

PA CHARACTERIZATION

- Asymmetry in IMD
- Due to time lag or phase shift as measured in the envelope time domain, between the AM-AM and AM-PM response
- Phase change is mainly caused by C-V characteristics of gate source junction
- Reducing gate source capacitance will reduce AM-PM and hence IMD asymmetry

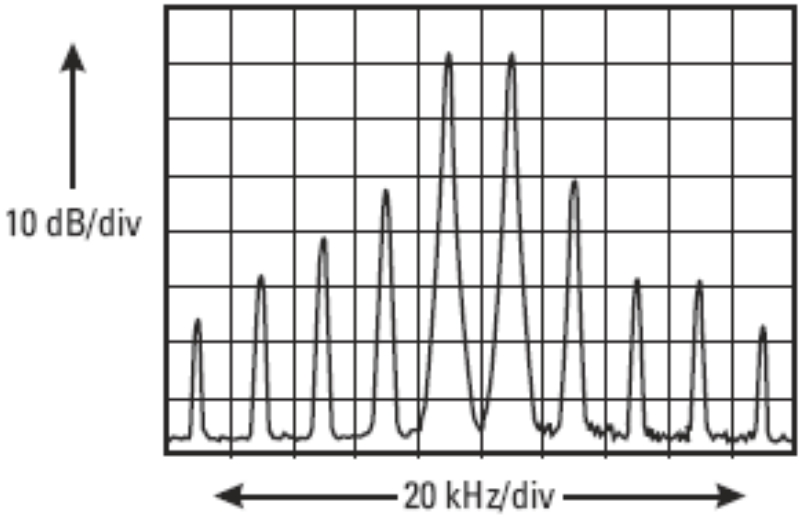

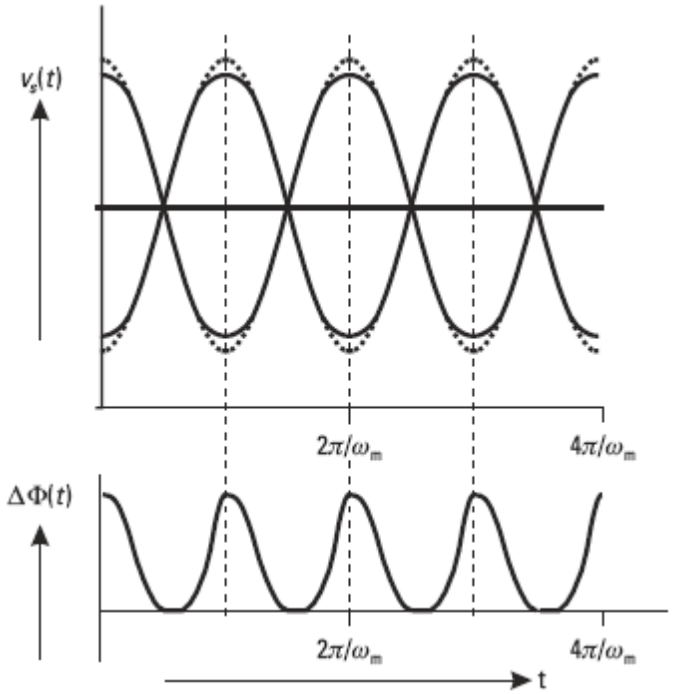

PA CHARACTERIZATION

- **AM-PM is significantly more in devices operating in Class AB mode where quiescent point is closer to region of maximum phase variation**
- **AM-PM is greatly reduced in GaN devices because of higher power density and smaller gate periphery**

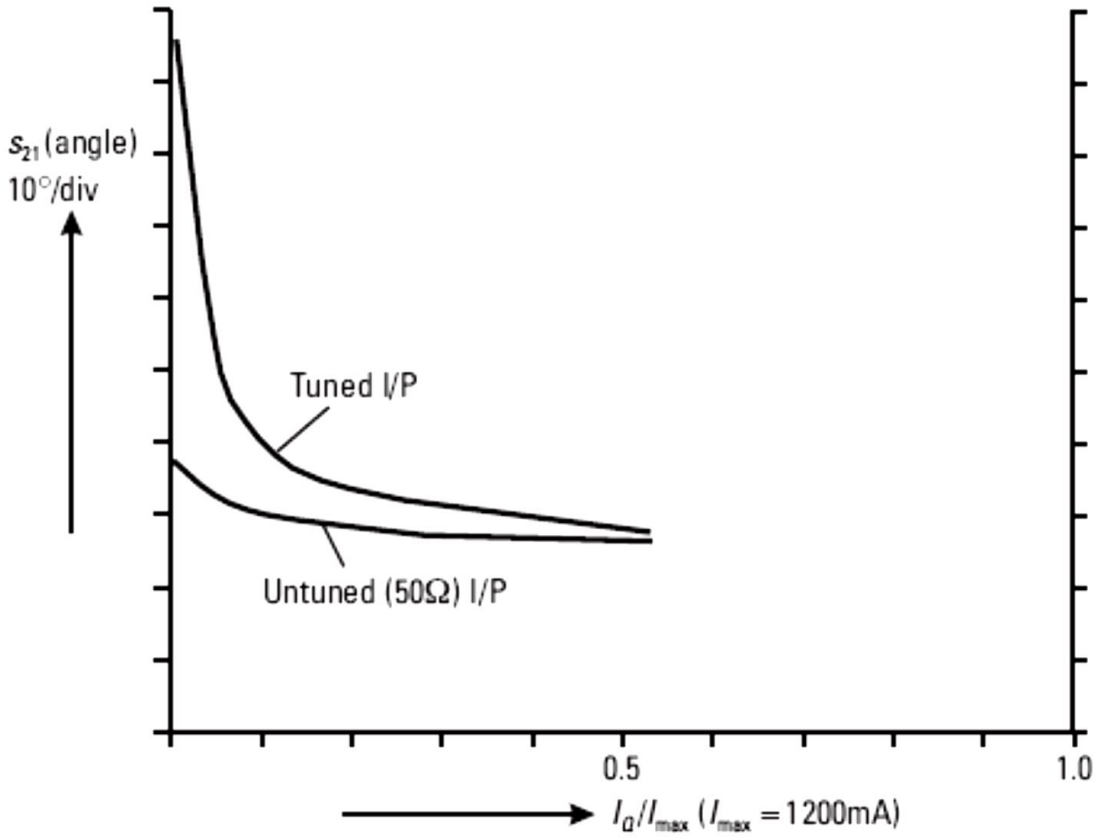

DIGITAL COMMUNICATION SYSTEM

- Peak power substantially higher than Average power
- Peaks are very infrequent
- Time trajectory driven by distinct "beat" or symbol clock
- Two time domains: first shows individual RF carrier variations and the second shows carrier modulation(Envelope Domain)
- Amplitude or Phase Distortion results in spectral spreading of signal

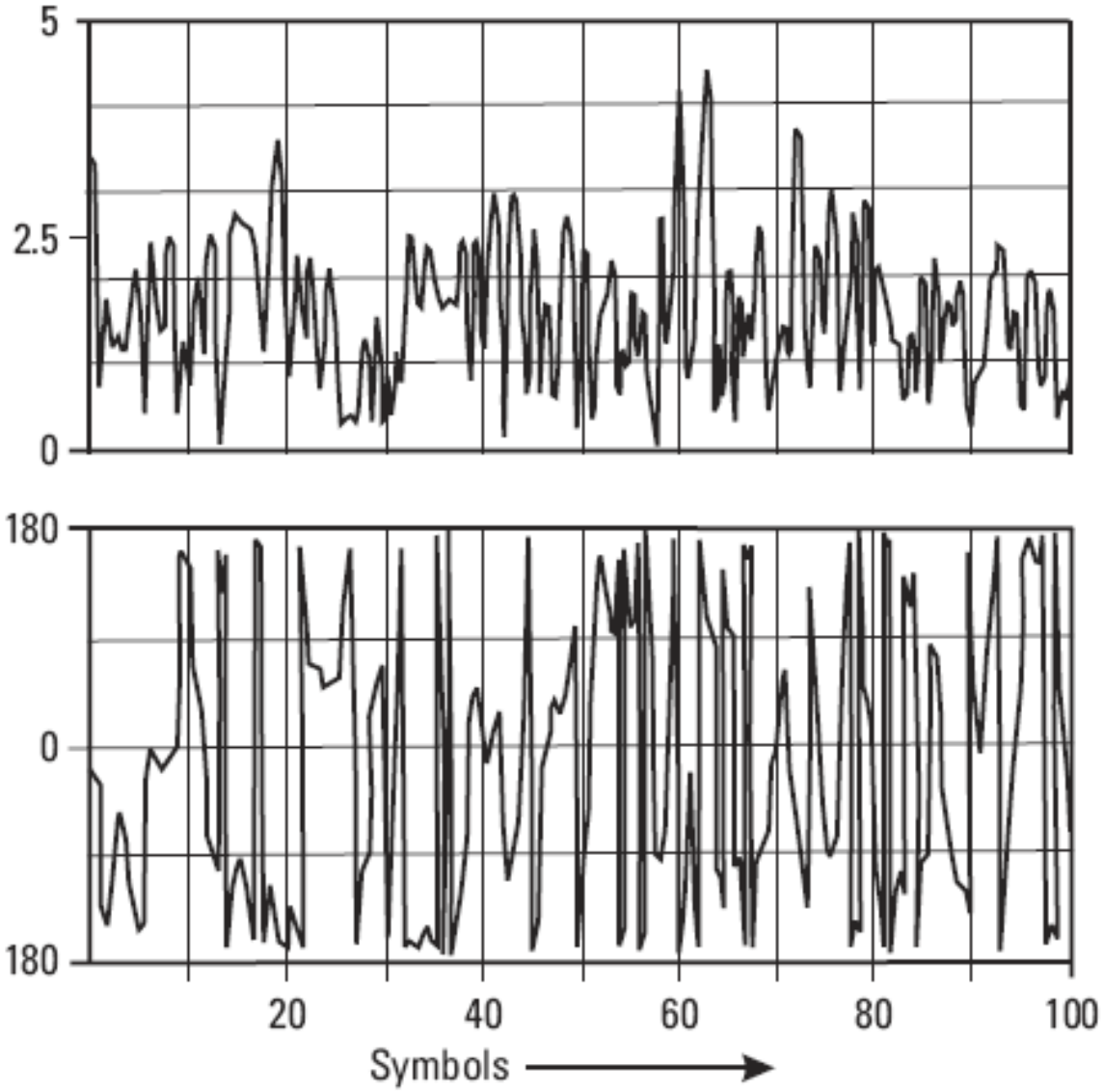

DIGITAL COMMUNICATION SYSTEM

- As the PA distorts, alleviates distortion by driving PA harder
- No more headroom for improvement near saturation
- Signal emerging from pre-distorter will be highly distorted like uncompensated PA necessitating the use of high speed digital circuitry
- PD is a passive device having no gain

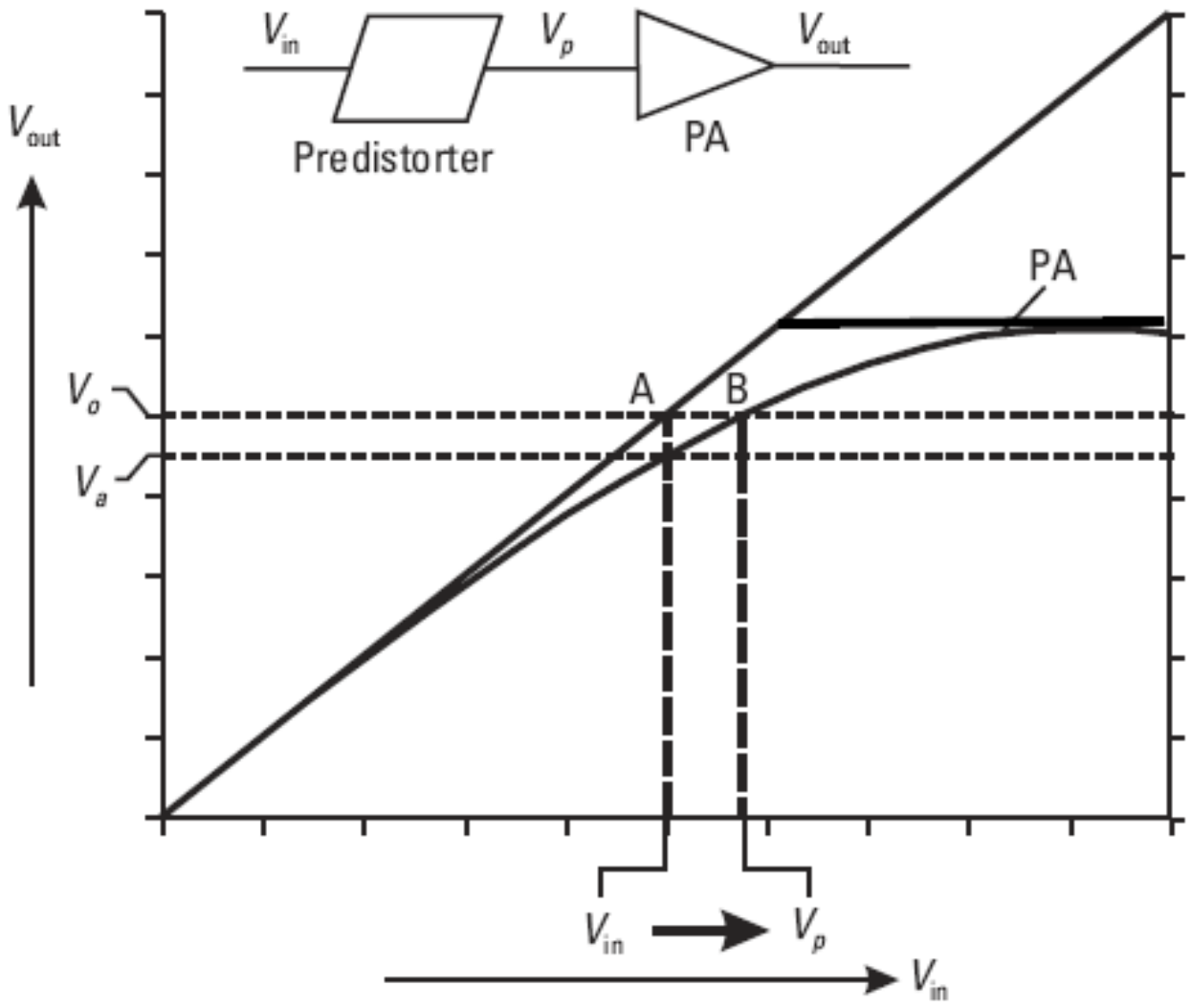

DIGITAL COMMUNICATION SYSTEM

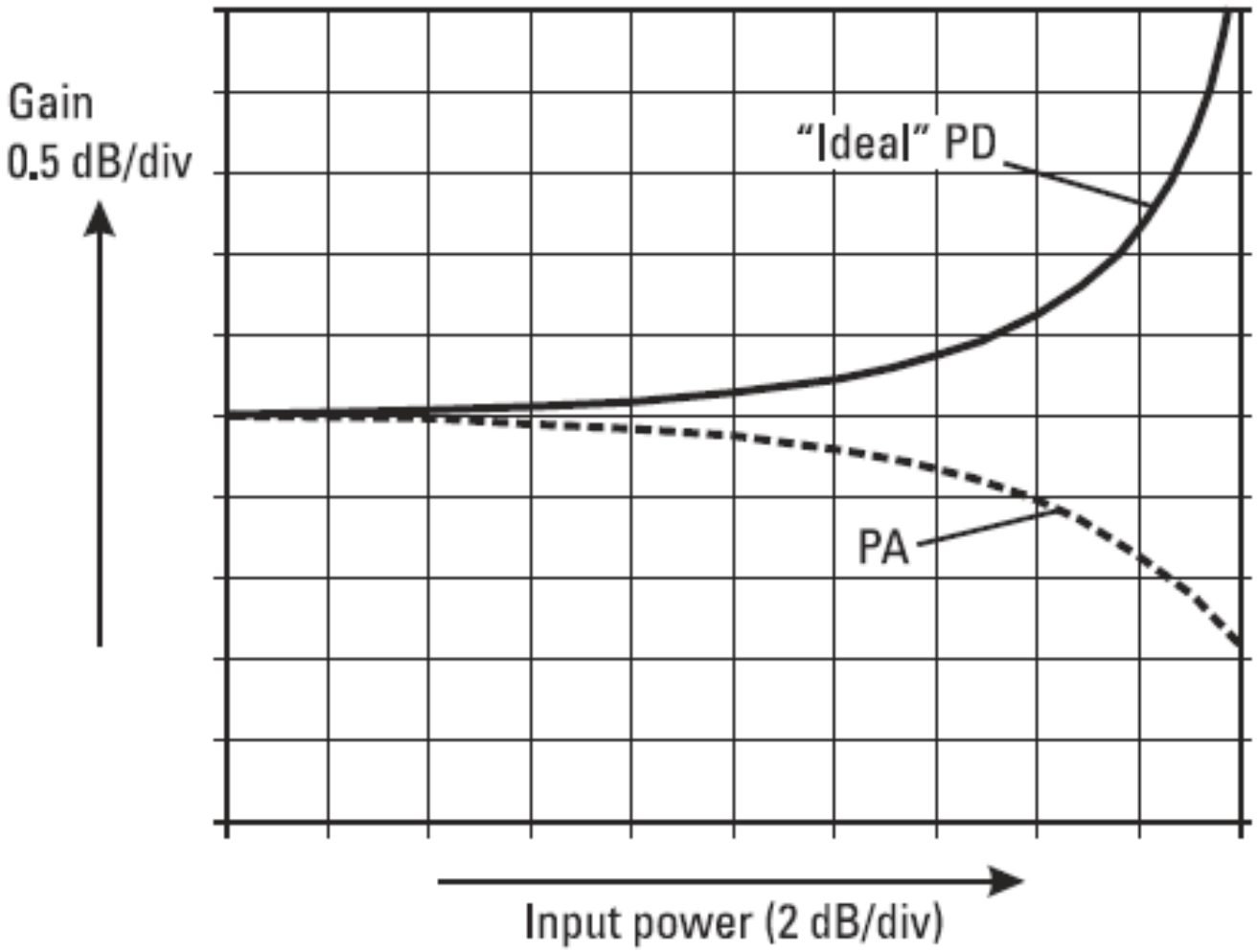

DIGITAL COMMUNICATION SYSTEM

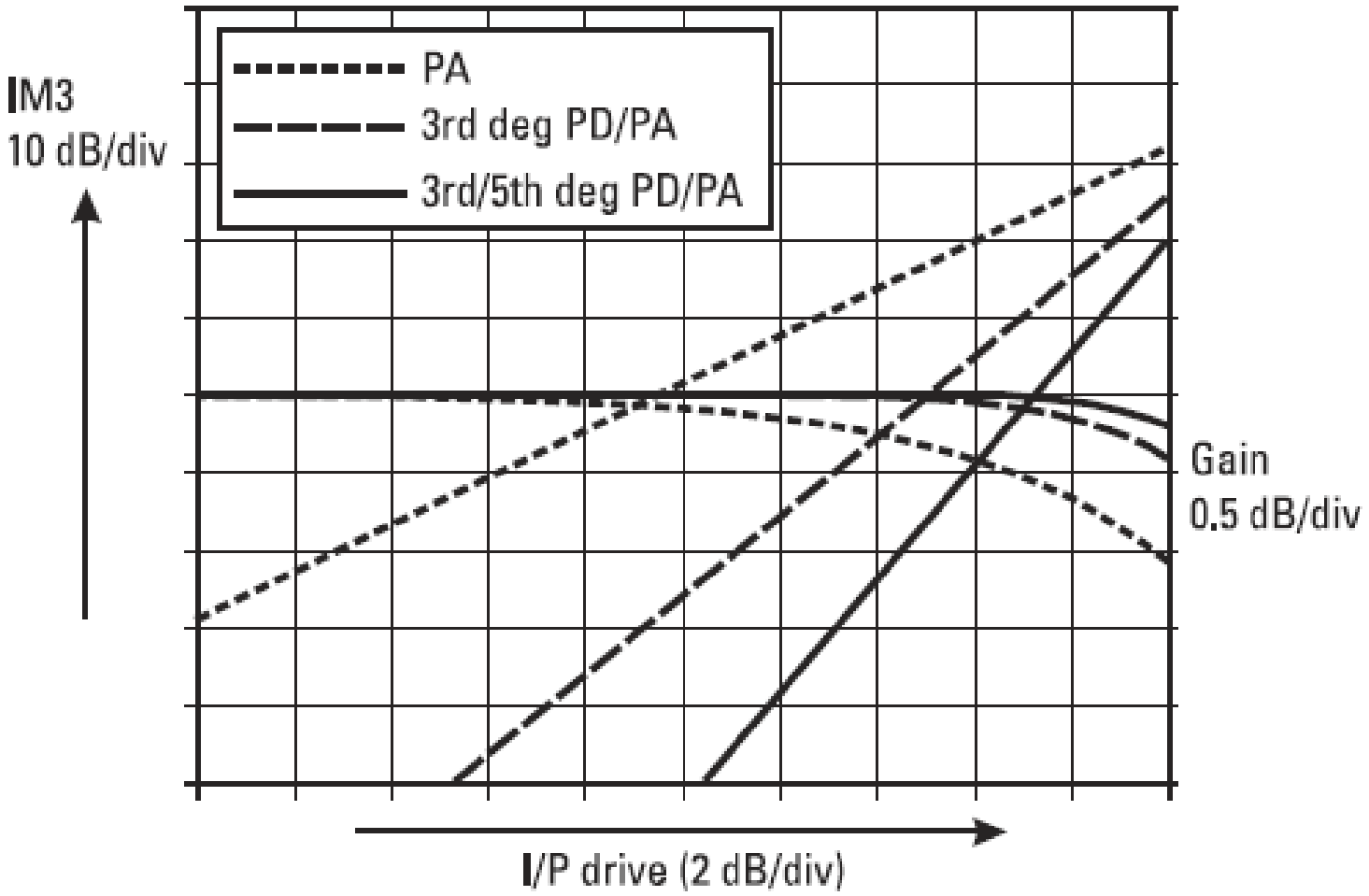

FEEDFORWARD LINEARIZER

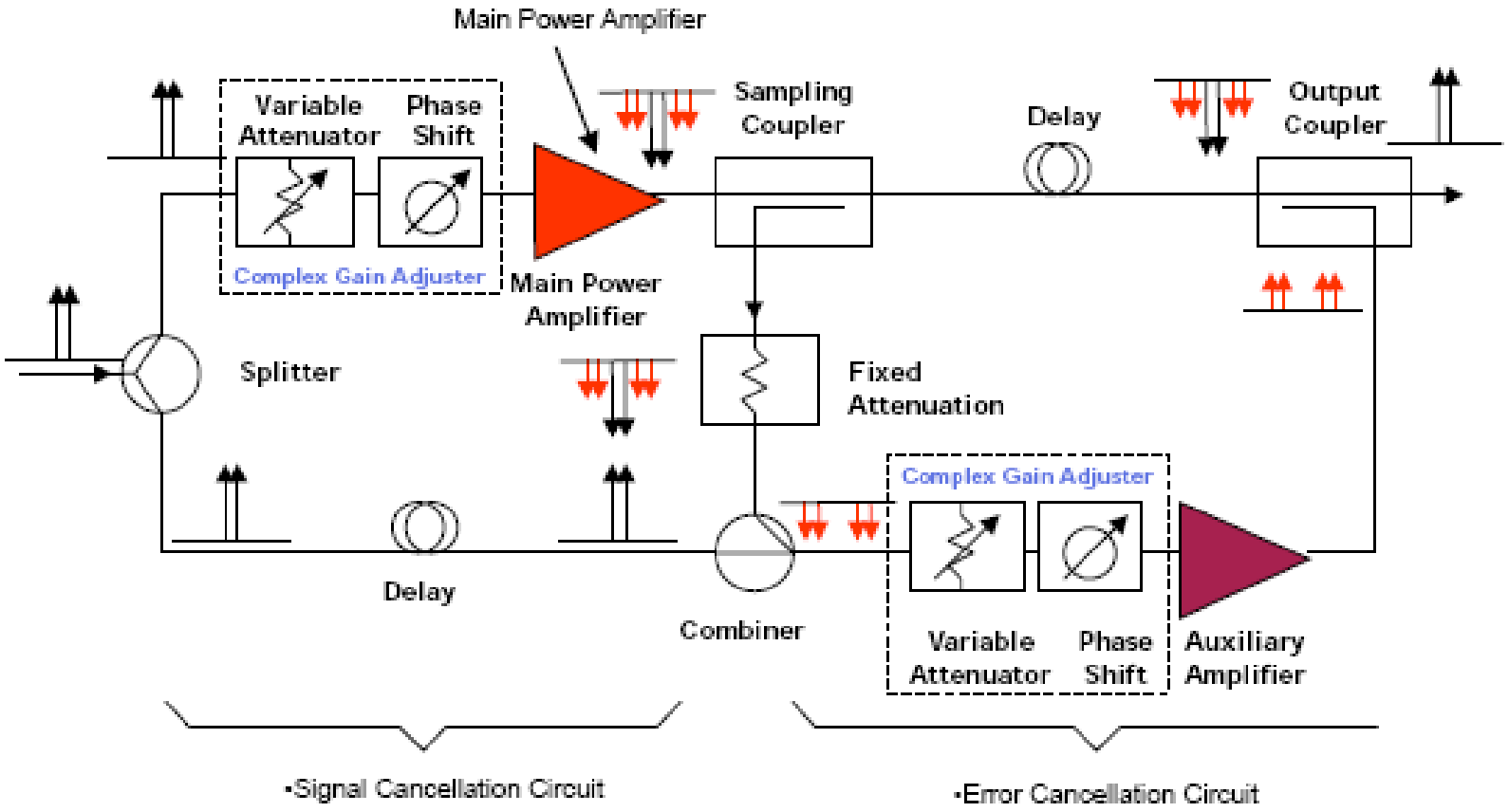

FEEDFORWARD LINEARIZER

$$v_{in} = v\cos\omega t$$

$$v_{pa} = a_1(v\cos\omega t) - a_3(v\cos\omega t)^3$$

$$\alpha v_{pa} = \alpha a_1(v\cos\omega t) - \alpha a_3(v\cos\omega t)^3$$

$$v_e = v\cos\omega t - \alpha v_{pa} = v\cos\omega t - \alpha a_1(v\cos\omega t) + \alpha a_3(v\cos\omega t)^3$$

$$\alpha = 1/a_1$$

$$v_e = \alpha a_3(v\cos\omega t)^3$$

$$v_{out} = a_1(v\cos\omega t) - a_3(v\cos\omega t)^3 + (1/\alpha)\alpha a_3(v\cos\omega t)^3$$

$$v_{epa} = b_1 v_e - b_3 v_e^3$$

$$= b_1\left(\alpha a_3 v^3\cos^3\omega t\right) - b_3\left(\alpha a_3 v^3\cos^3\omega t\right)^3$$

DIGITAL PREDISTORTION

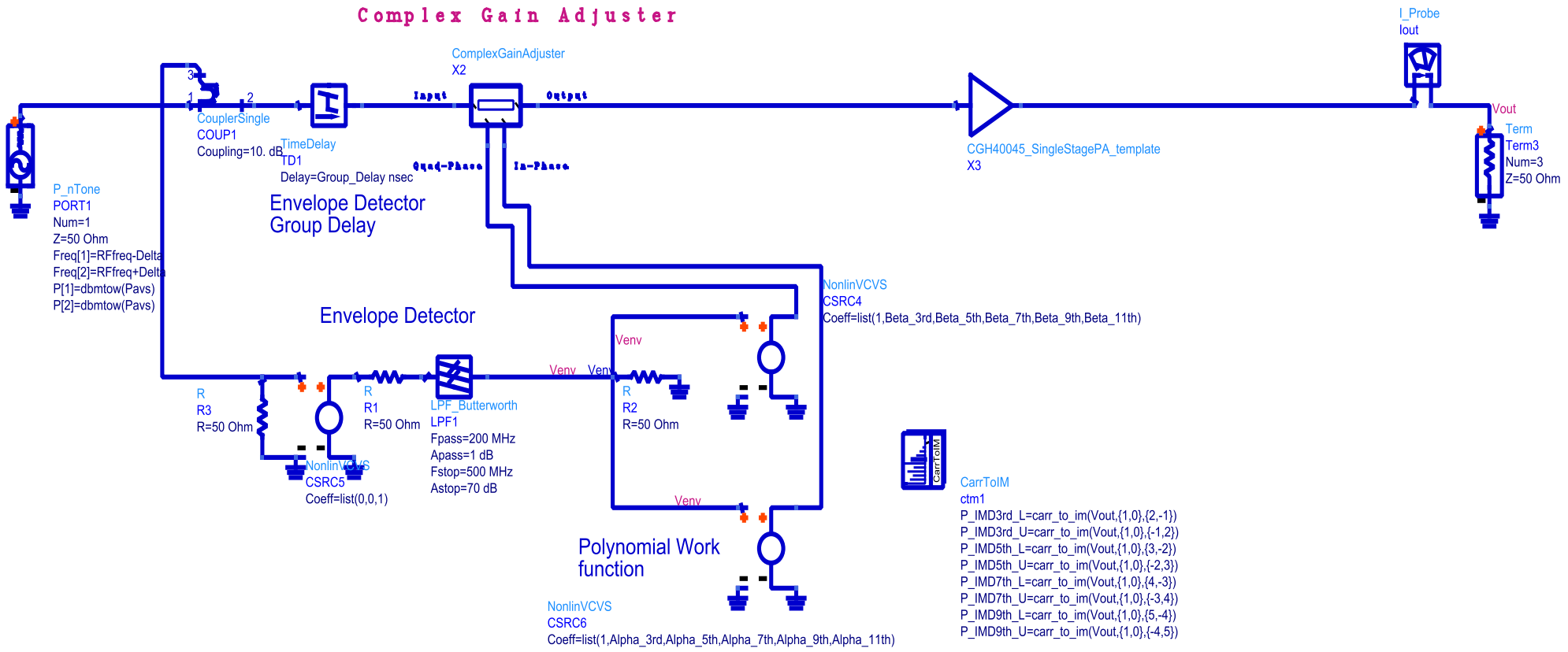

ADAPTIVE DIGITAL PREDISTORTION

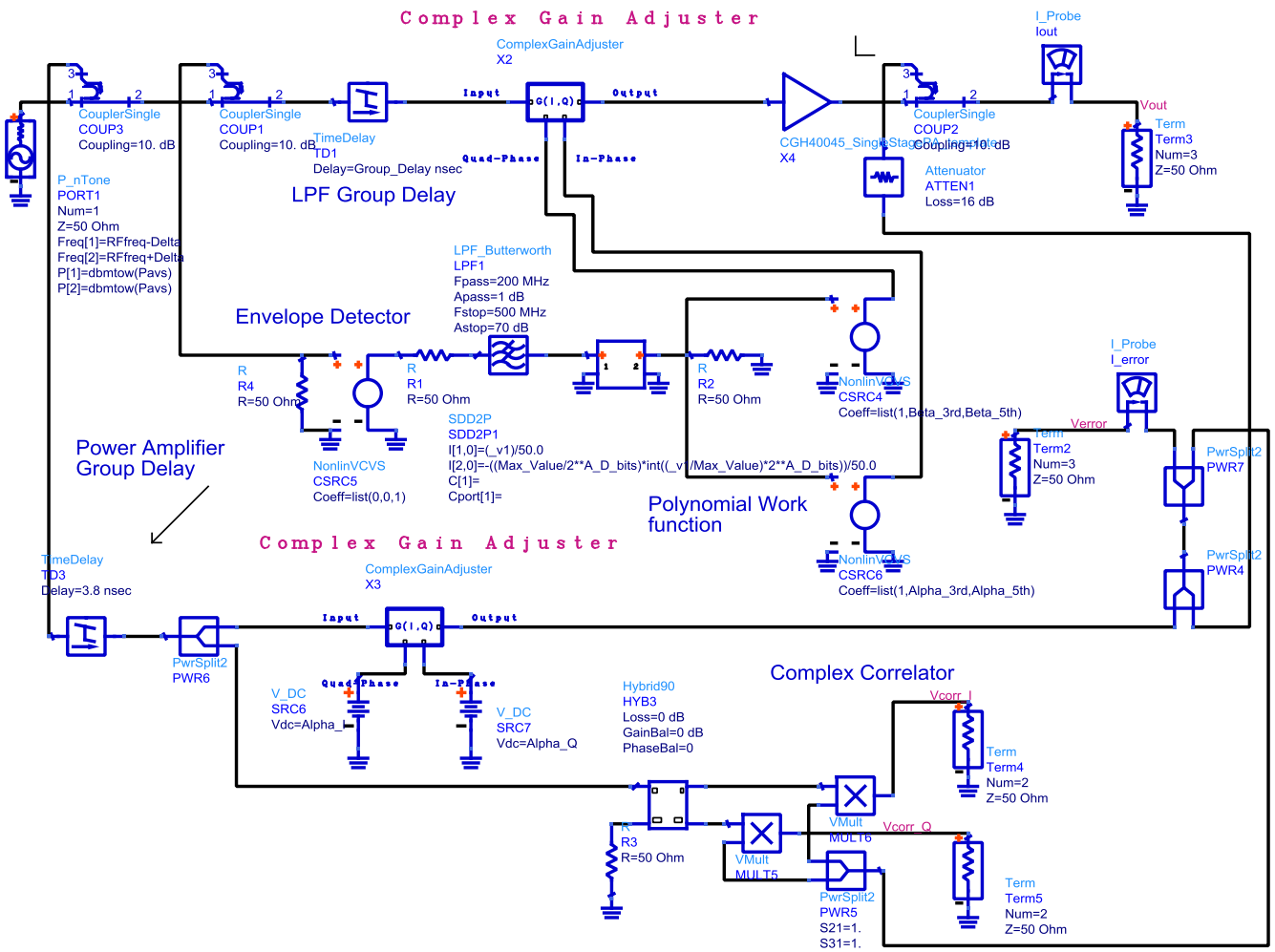

ADAPTIVE DIGITAL PREDISTORTION AT IF

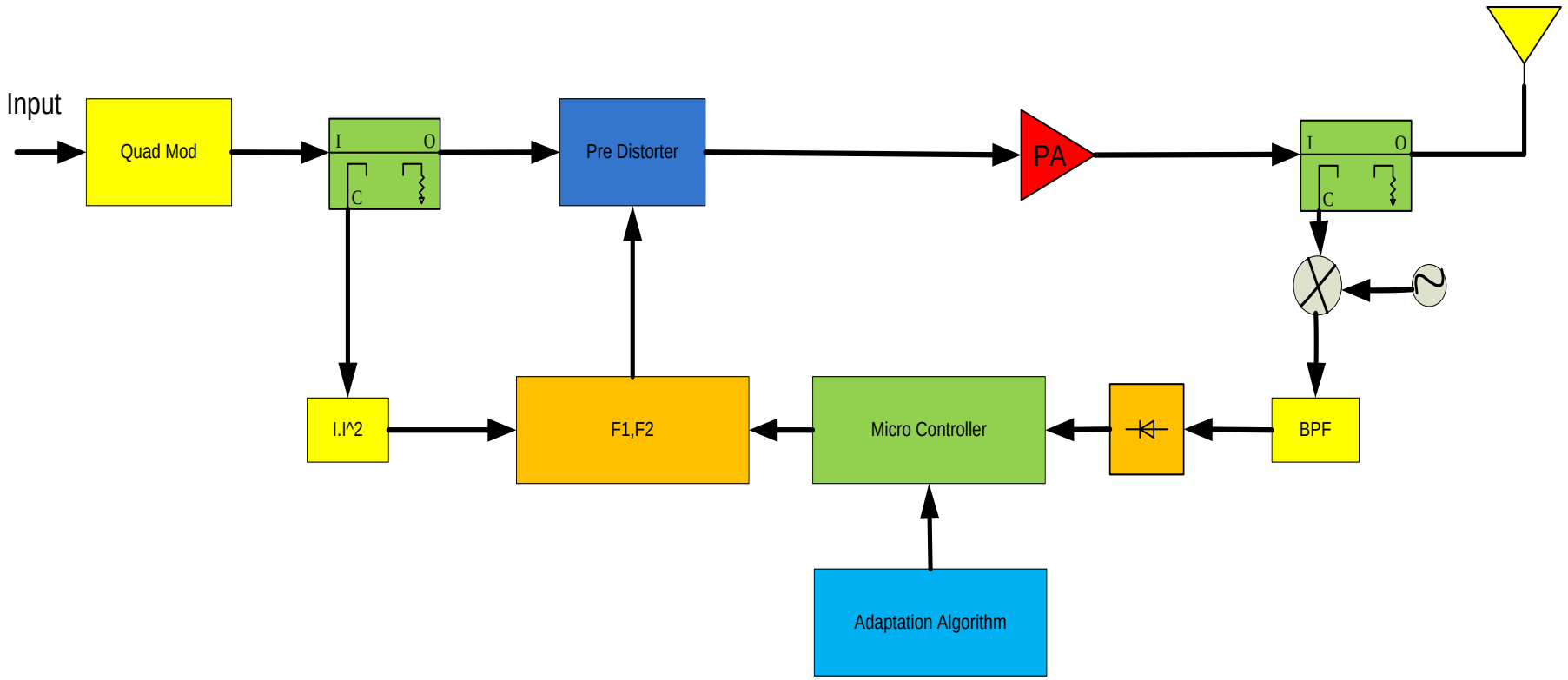

ADAPTIVE DIGITAL PREDISTORTION AT BASEBAND

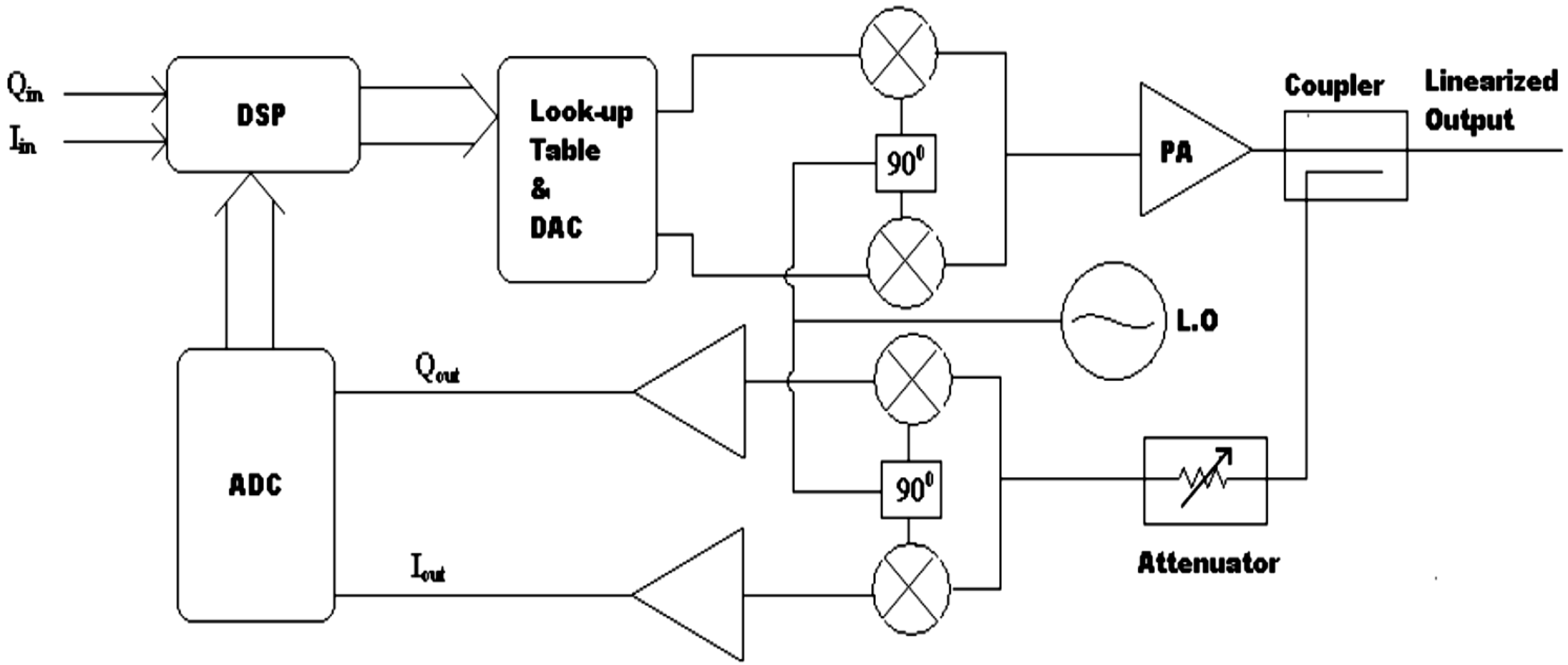

ADAPTIVE DIGITAL PREDISTORTION AT BASEBAND

Memory Polynomial LUT Pre-Distorter

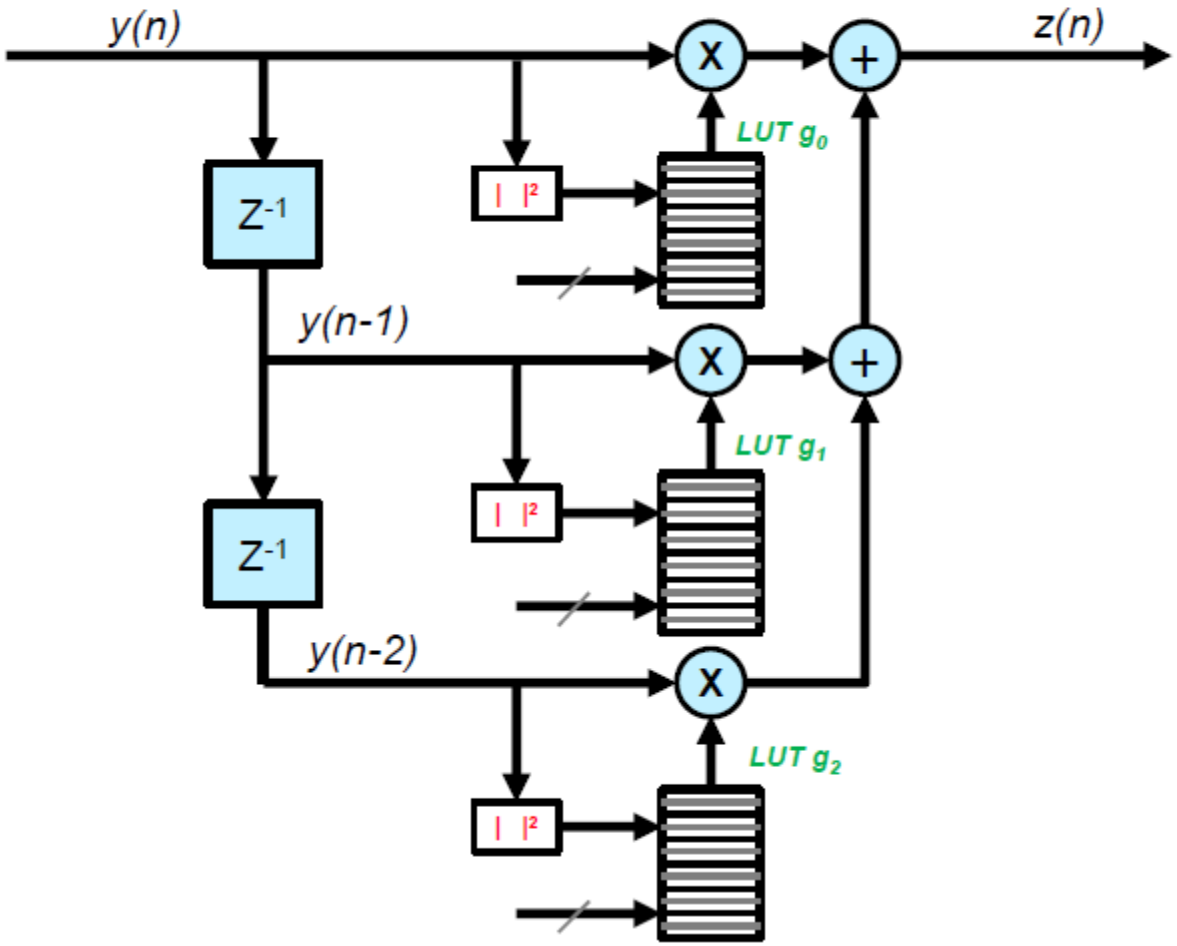

ADAPTIVE DIGITAL PREDISTORTION(ADPD)

ADPD Implementation issues

- Input signal delay to compensate processing delays
- Correction signal to contain multiple harmonics of baseband signal
- Places stringent requirement on data converters
- Digital correcting circuitry more complicated than the digital circuitry generating the baseband signal

RF SYSTEM DESIGN

Presented by

Bhupinder Singh

Finetuning Academy

RF & Wireless matters

ANALOG TRANSCEIVER PARAMETERS

a. Sensitivity (Noise floor, NF)
b. Non Linear Distortion(2-Tone IMD)
c. AM-AM and AM-PM distortion (1-Tone Measurement)

Noise Figure

- Sources of receiver noise

1. Noise picked by antenna (Ta=290K)
2. Noise generated by the receiver

. Thermal Noise -thermal agitation of bound charges

$$V_n = \sqrt{4kTBR}$$

. $^1/_f$ Noise present from 1Hz to 1MHz

. Available Noise Power= KT_aB ; K=1.38$*$ 10^{-23} (J/K)

. Noise Power Density=KT_a (W/Hz)=-174dbm/Hz @RT

Noise Figure (Contd.)

$$\text{SNR} = \frac{\textit{Wanted Signal Power}}{\textit{Unwanted Noise Power}}$$

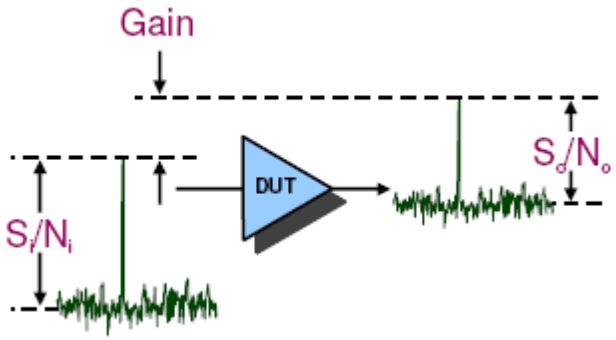

$$\text{Noise Factor} = \frac{\textit{SNR at Input}}{\textit{SNR at Output}}$$ for a linear 2-port N/W

$$= \frac{S_i/N_i}{S_0/N_o} = \frac{N_o}{(G)*N_i}$$

$$\text{NF} = 10*\log_{10} F$$

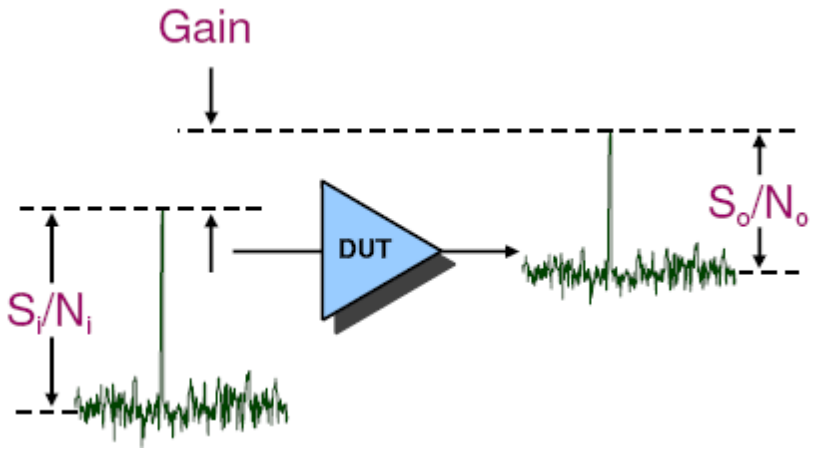

Noise Figure of Cascade

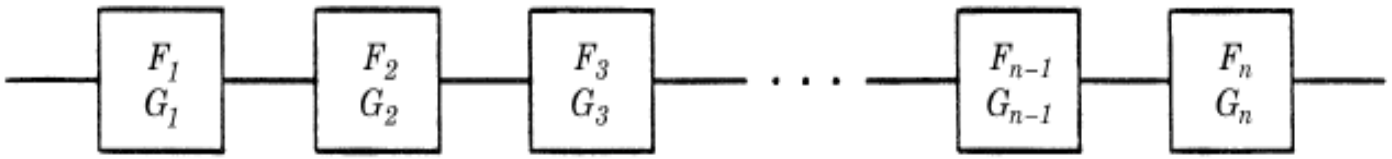

$$F = F_1 + \frac{F_2 - 1}{G_1} + \frac{F_3 - 1}{G_1 G_2} + \cdots + \frac{F_n - 1}{G_1 G_2 \cdots G_{n-1}}$$

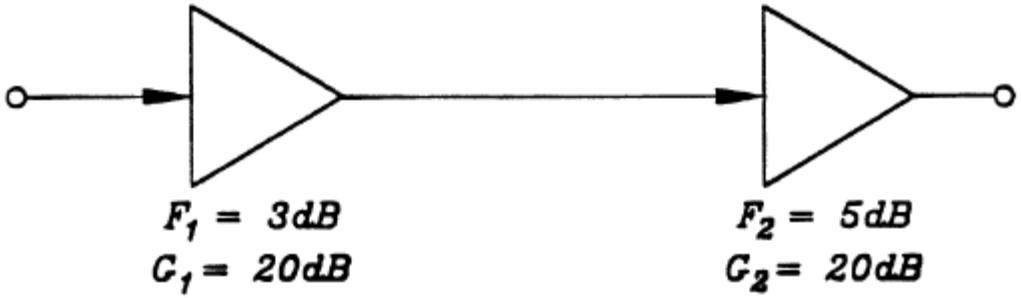

$F_1 = 3 \text{ dB} = 2 \qquad F_2 = 5 \text{ dB} = 3.162$

$G_1 = 20 \text{ dB} = 100 \qquad G_2 = 20 \text{ dB} = 100$

$G = G_1 G_2 = 10{,}000 = 40 \text{ dB}$

$$F = F_1 + \frac{F_2 - 1}{G_1} = 2 + \frac{3.162 - 1}{100}$$

$$= 2 + 0.0216 = 2.0216 = 3.06 \text{ dB}.$$

Equivalent Noise Temperature

$T_e = (F - 1) * T_O$; hence

$$F = \frac{T_e}{T_o} + 1$$

F (dB)	3	2.28	1.29	0.82	0.29
T_e (K)	290	200	100	60	20

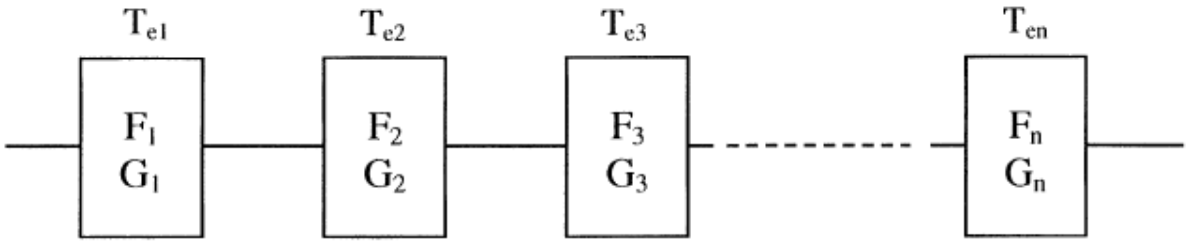

$$T_e = T_{e1} + \frac{T_{e2}}{G_1} + \frac{T_{e3}}{G_1 G_2} + \cdots + \frac{T_{en}}{G_1 G_2 \cdots G_{n-1}}$$

Note: Overall system noise temperature including antenna is $T_S = T_A + T_e$

1-db Compression

Input signal power in dbm that produces 1-db compression in gain is

$$P_{in,1db} = P_{out,1db} - G + 1db$$

Minimum Detectable Signal (MDS) is defined as 3 db above the noise floor, given by

$$MDS = KT_a\mathrm{B} + 3\ \mathrm{db}$$

Dynamic Range

Dynamic range is defined as the range between 1-db compression point and minimum detectable signal (MDS).

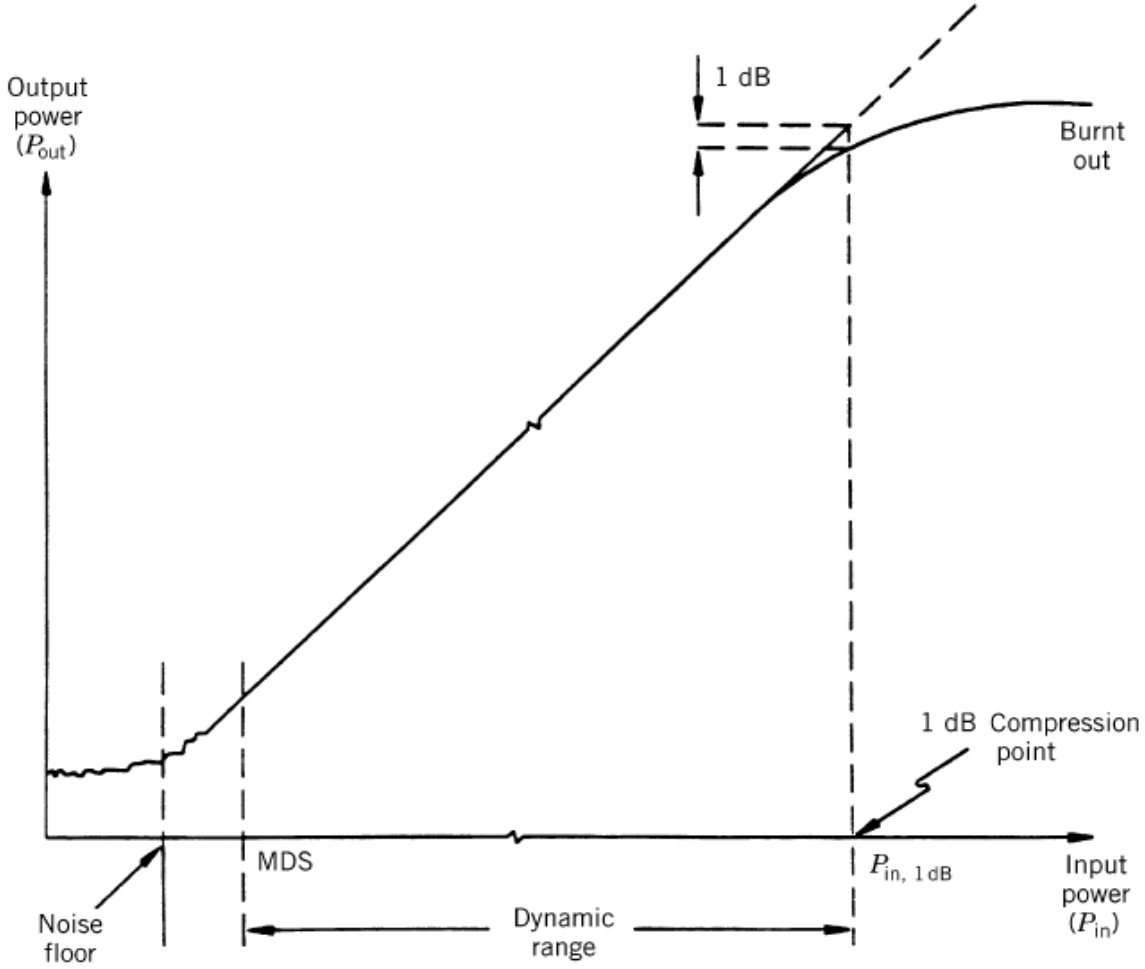

Intermodulation Distortion

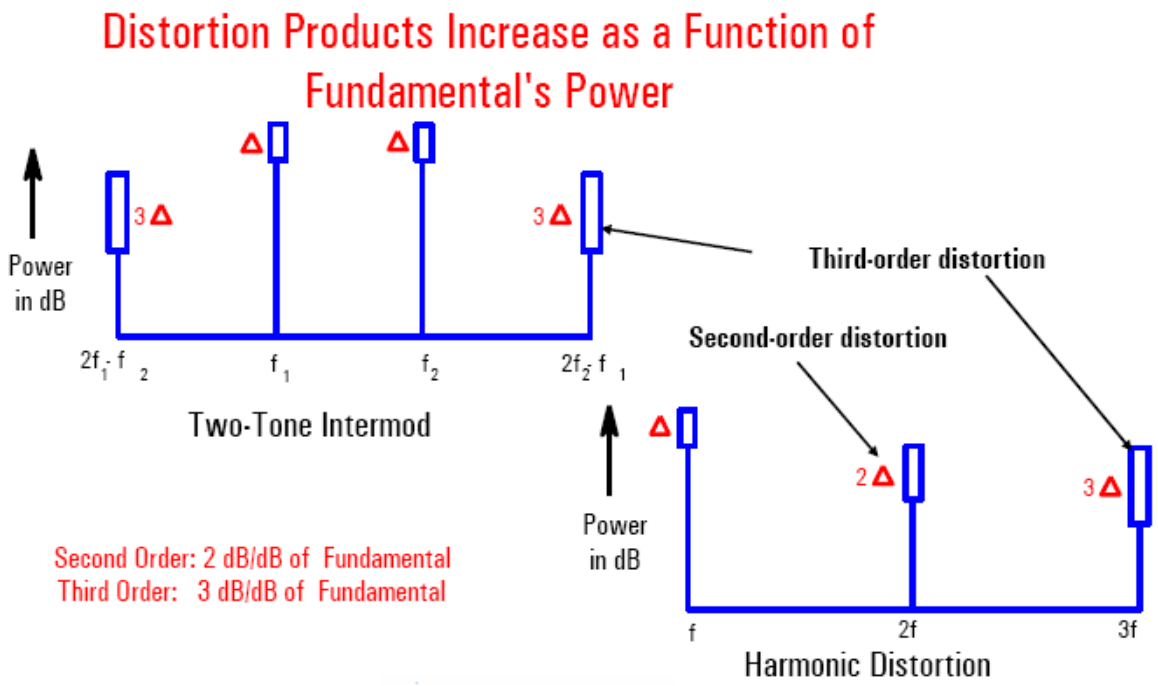

Intermodulation Distortion (Contd.)

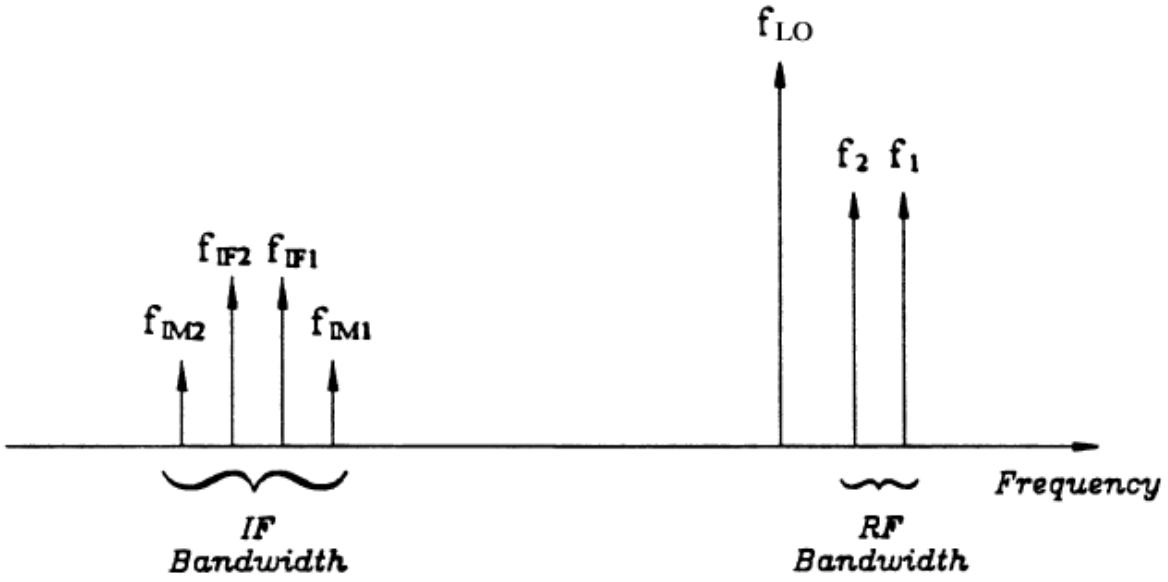

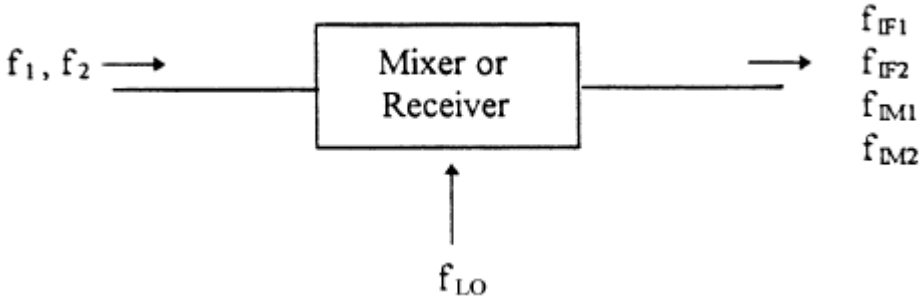

These intermodulation products are usually of primary interest because of their relatively large magnitude and because they are difficult to filter from the desired mixer outputs (f_{IF1} and f_{IF2}) if Δ is small.

Intermodulation Distortion (Contd.)

Third order Intercept Point (TOI)

- Figure of merit for intermodulation product suppression
- High Intercept Point means higher suppression of undesired intermodulation

$$OIP_3 = (P_1 - P_{IMD})/2 + P_1$$

$$IIP_3 = P_{IN} + \frac{1}{2}(P_1 - P_{IMD})$$

Intermodulation Distortion (Contd.)

TOI of cascade

$$\frac{1}{OIP_3} = \frac{1}{G(2)G(3)OIP_3(1)} + \frac{1}{G(3)\,OIP_3(2)} + \frac{1}{OIP_3(3)}$$

$$IIP_3 = \frac{OIP_3}{G(1)G(2)G(3)}$$

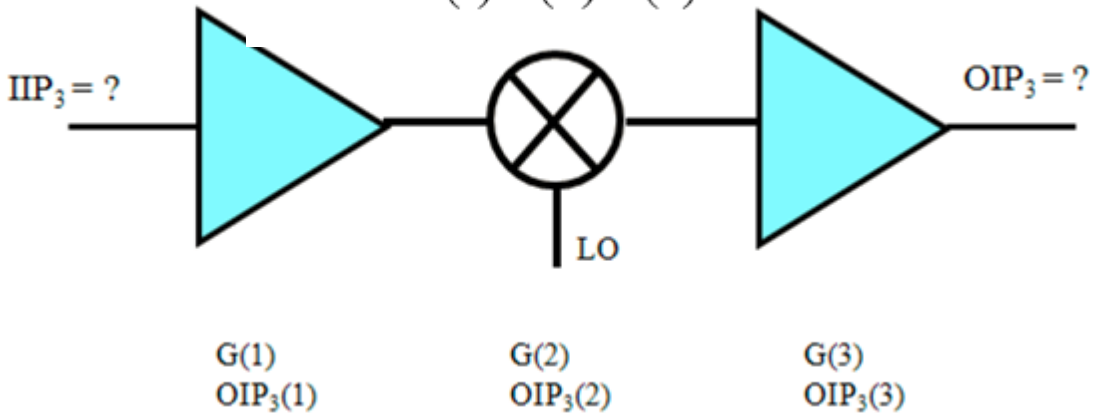

Intermodulation Distortion (Contd.)

Example

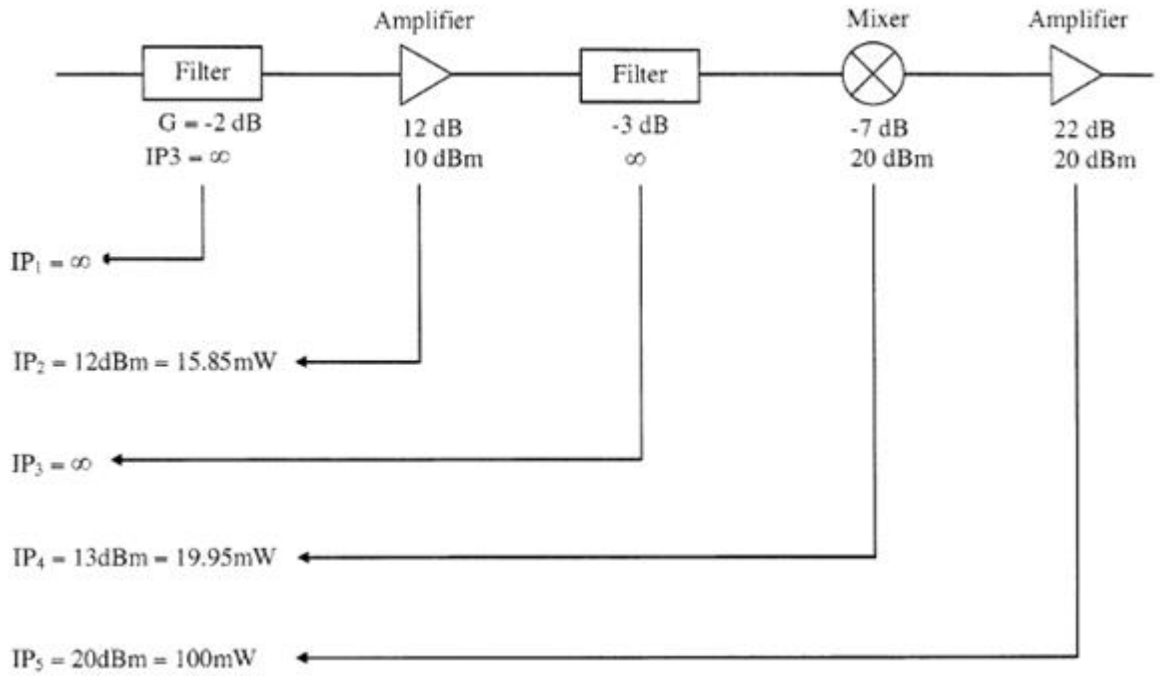

Ans +9.1dbm

DIGITALLY MODULATED SYSTEM

- CCDF ACCDF curve shows how much time the signal spends at or above a given power level

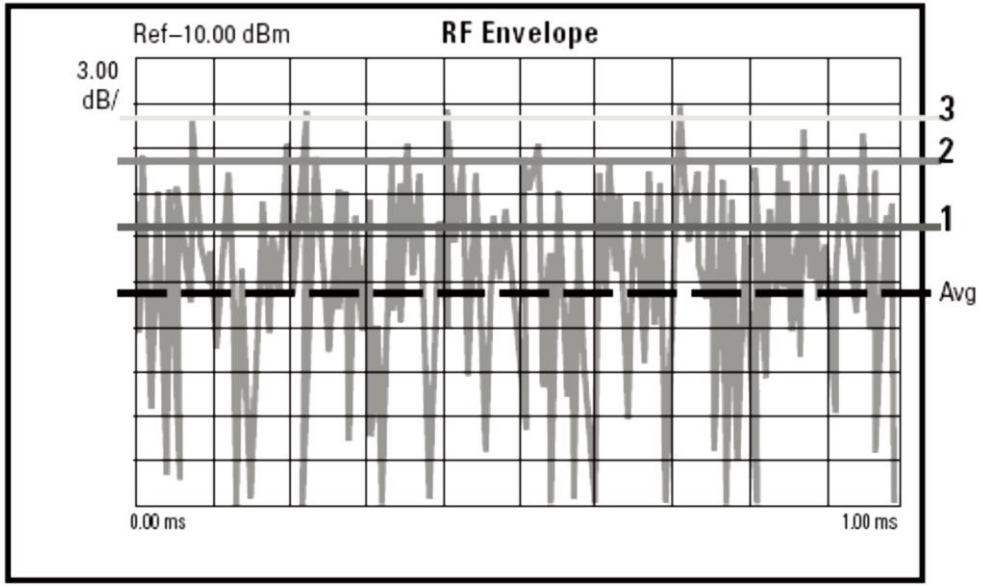

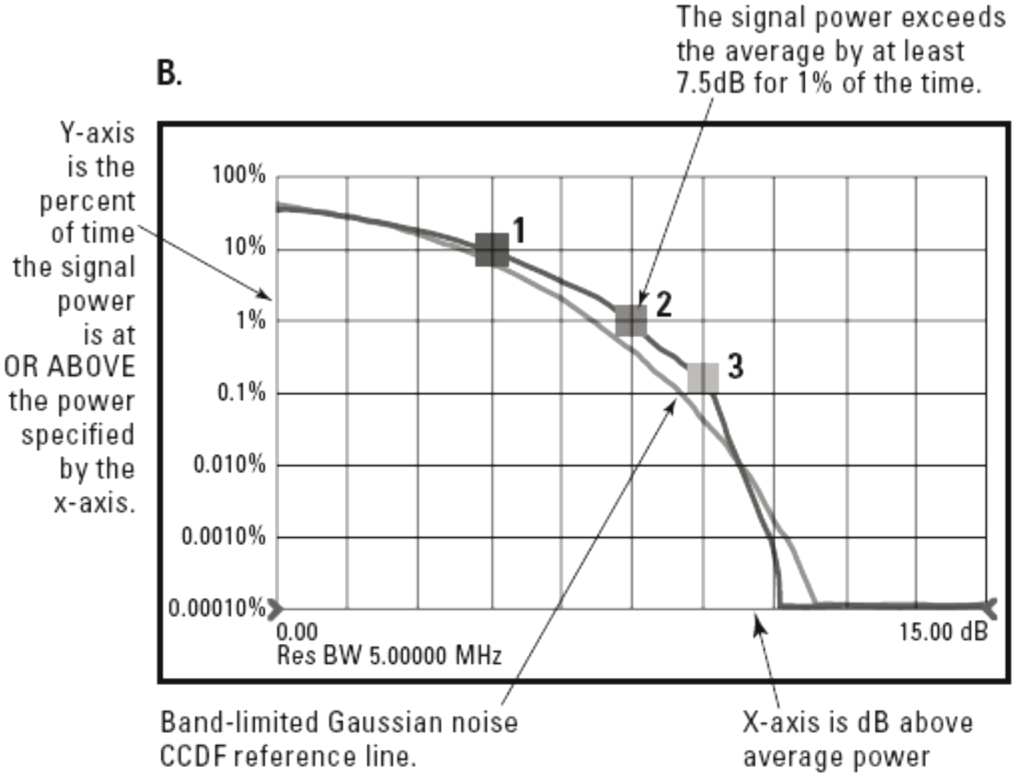

DIGITALLY MODULATED SYSTEM

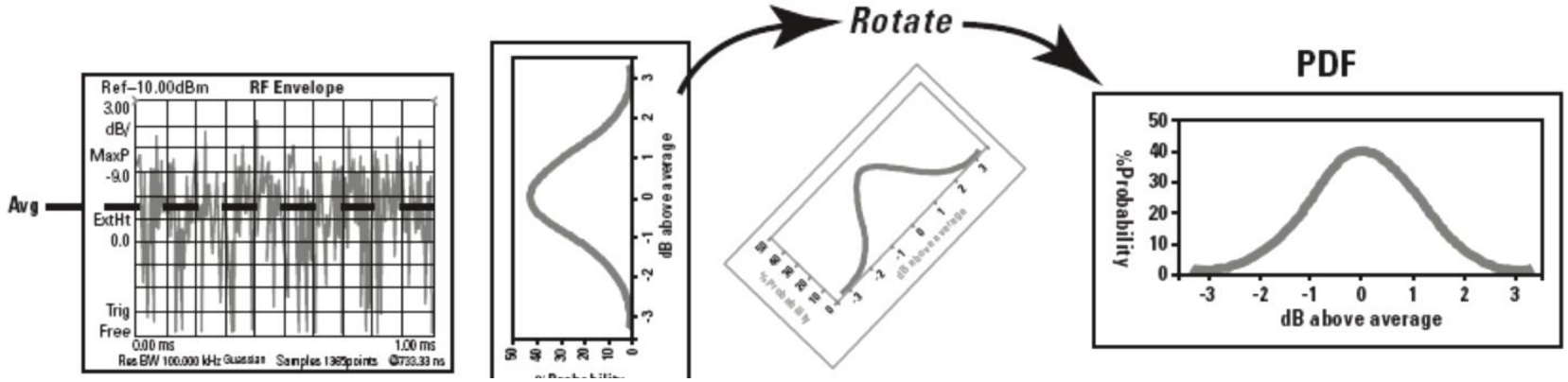

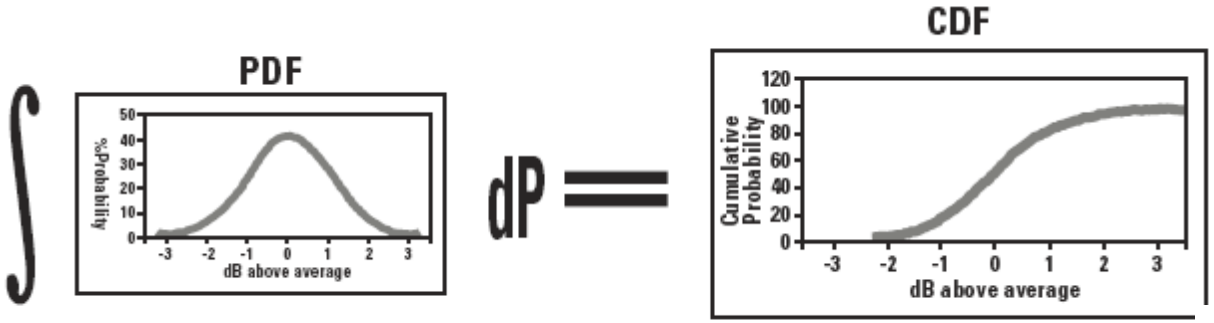

ORIGIN OF CCDF CURVES

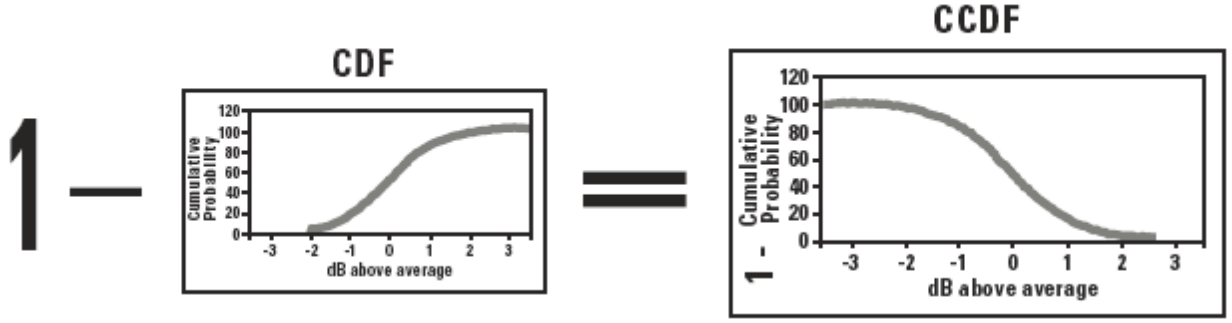

DIGITALLY MODULATED SYSTEM

- CCDF specify the power characteristics of the signal that will be mixed, amplified and decoded in communication systems.
- Useful tool for baseband DSP Engineer to convey the signal characteristics to RF Engineer

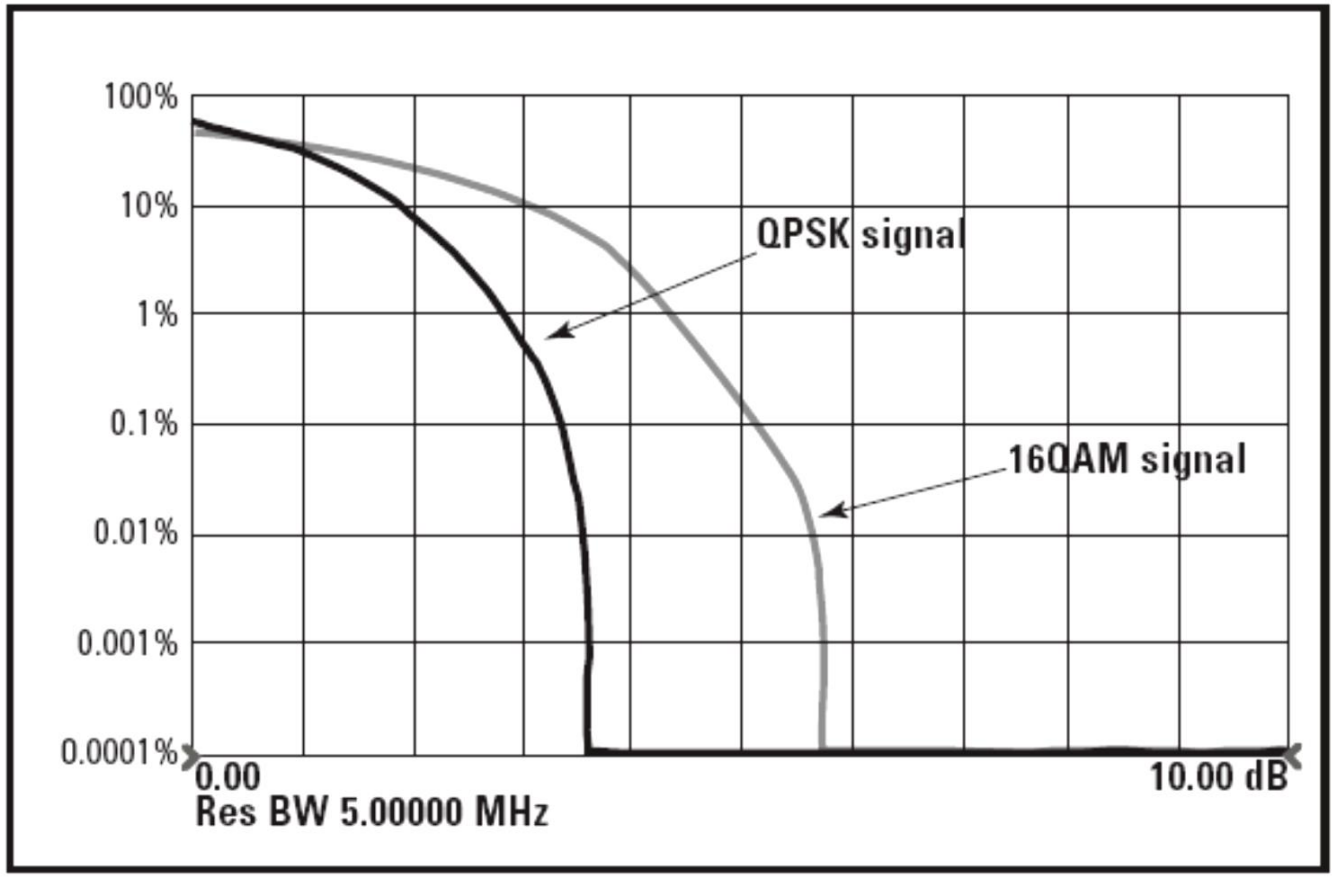

DIGITALLY MODULATED SYSTEM

- Pulse shaping can significantly effect CCDF curve
- A higher roll off factor (α) will result in lower Pk to Av power ratio compared with a lower roll off factor in a digital system

Signal A:
Filter alpha at 0.22
Root-raised-cosine filter

Signal B:
Filter alpha at 0.75
Root-raised-cosine filter

(c)

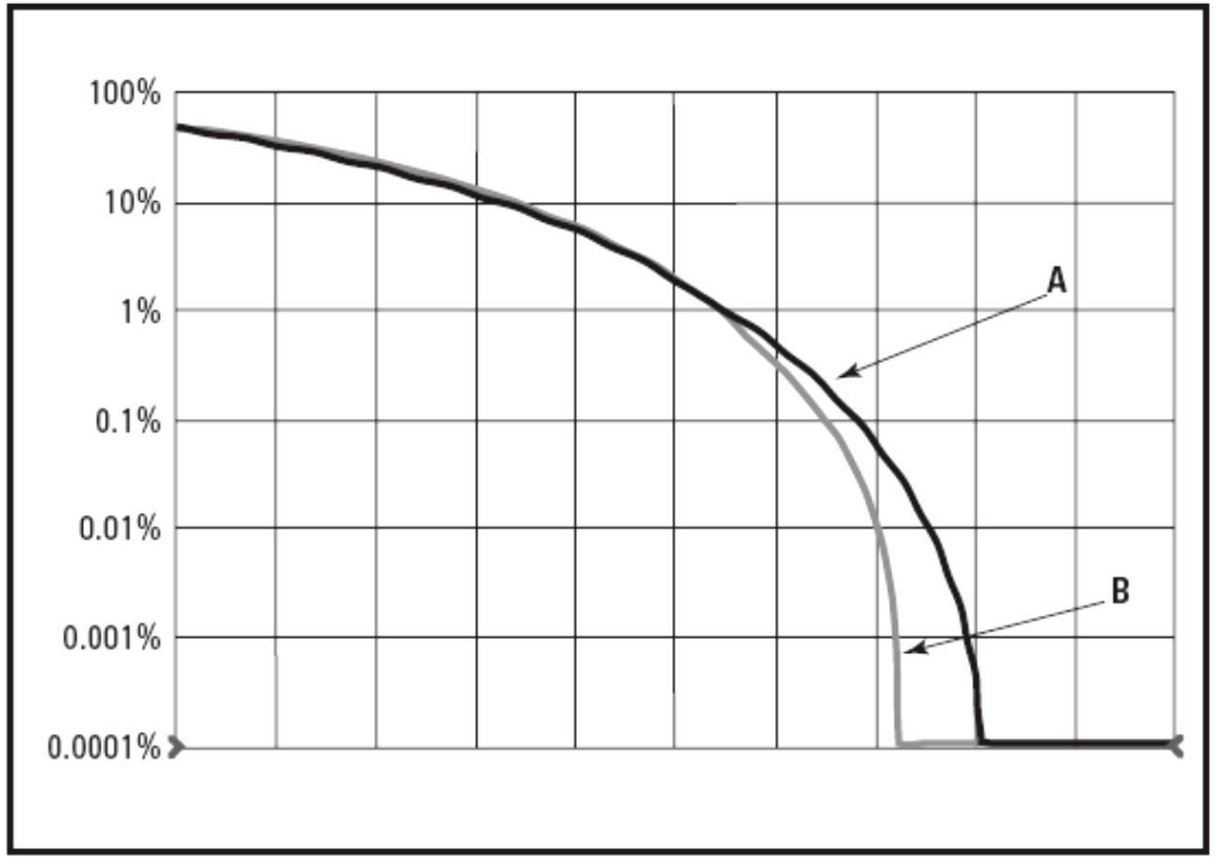

DIGITALLY MODULATED SYSTEM

- Compression effect displayed by CCDF curve
- Cause could be Nonlinearities of PA, Mixer or pre amplifier

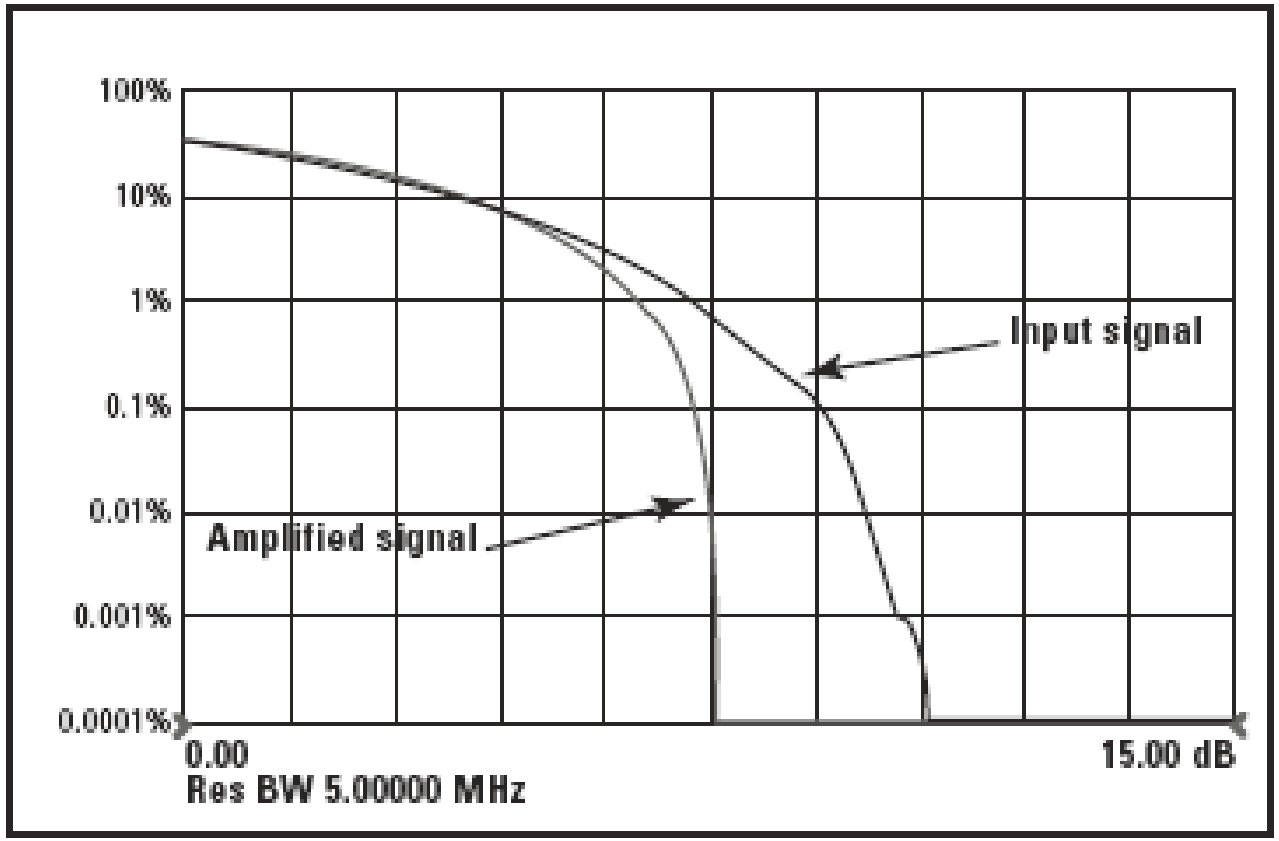

DIGITALLY MODULATED SYSTEM

- EVM is the scalar distance between two phasor end points (magnitude of the difference vector)
- Usually expressed as the percent of the peak signal level, usually defined by the constellation's corner states.

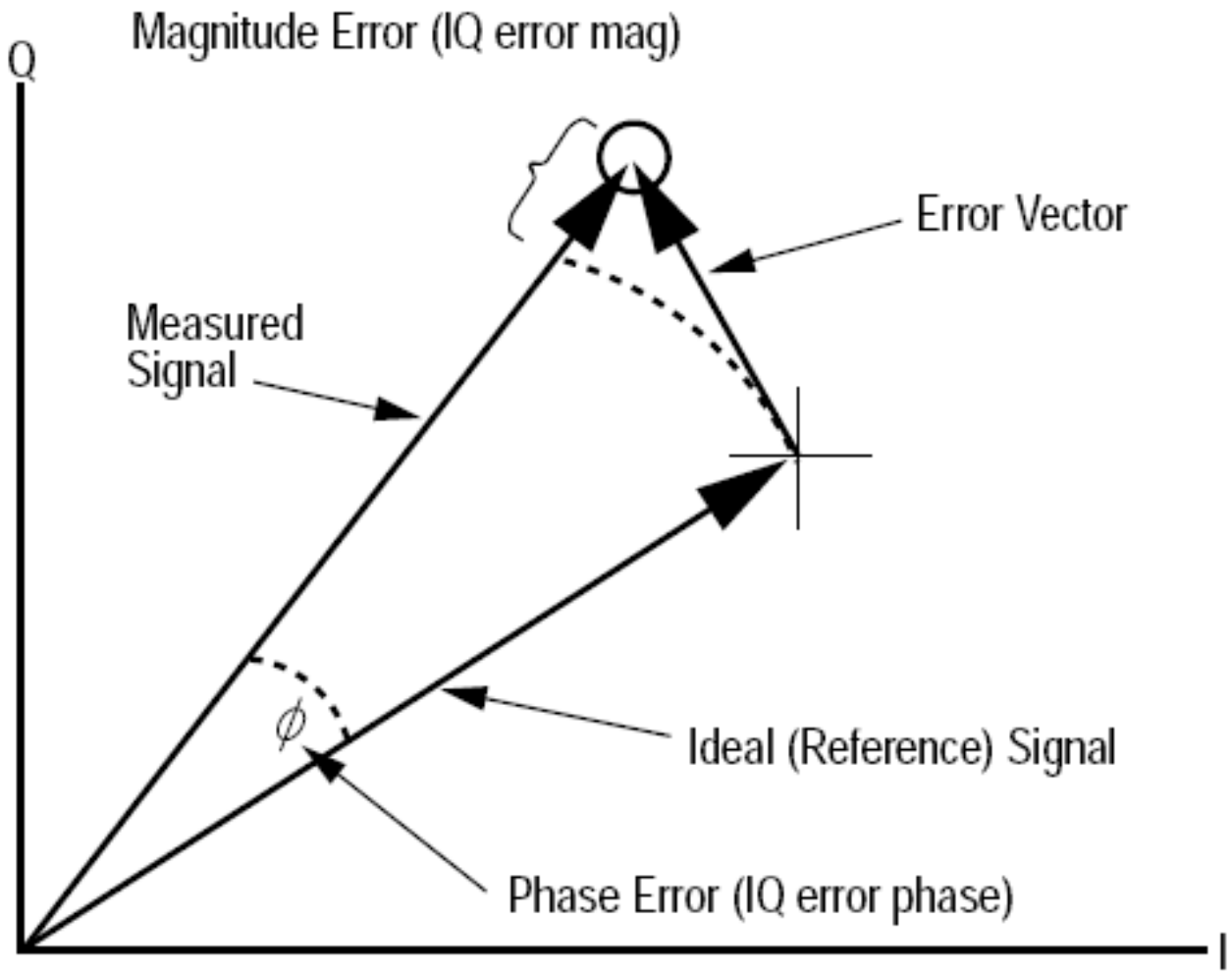

WHAT IS BER?

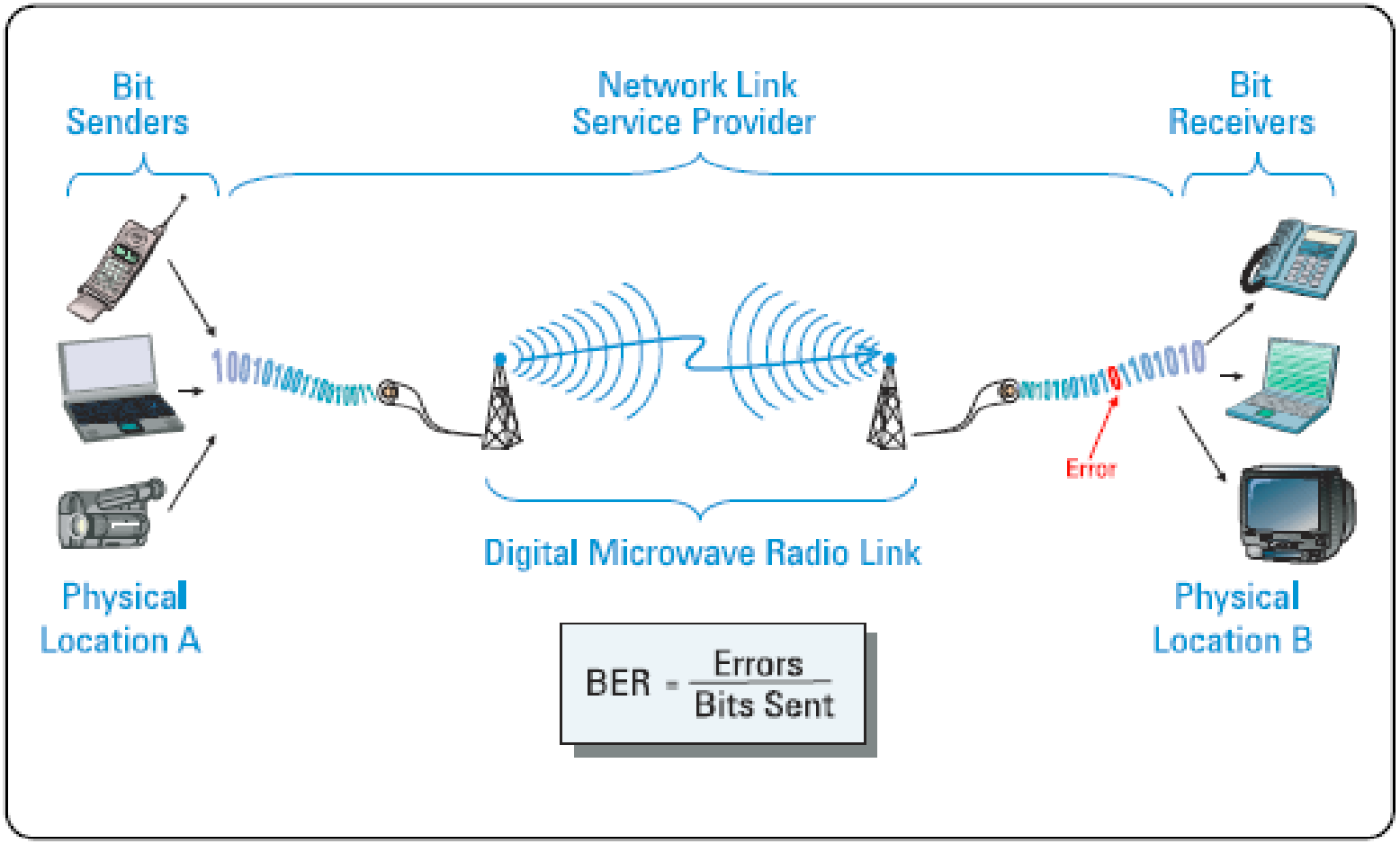

Digital Data Link and Bit Error Rate

WHAT IS RESIDUAL BER?

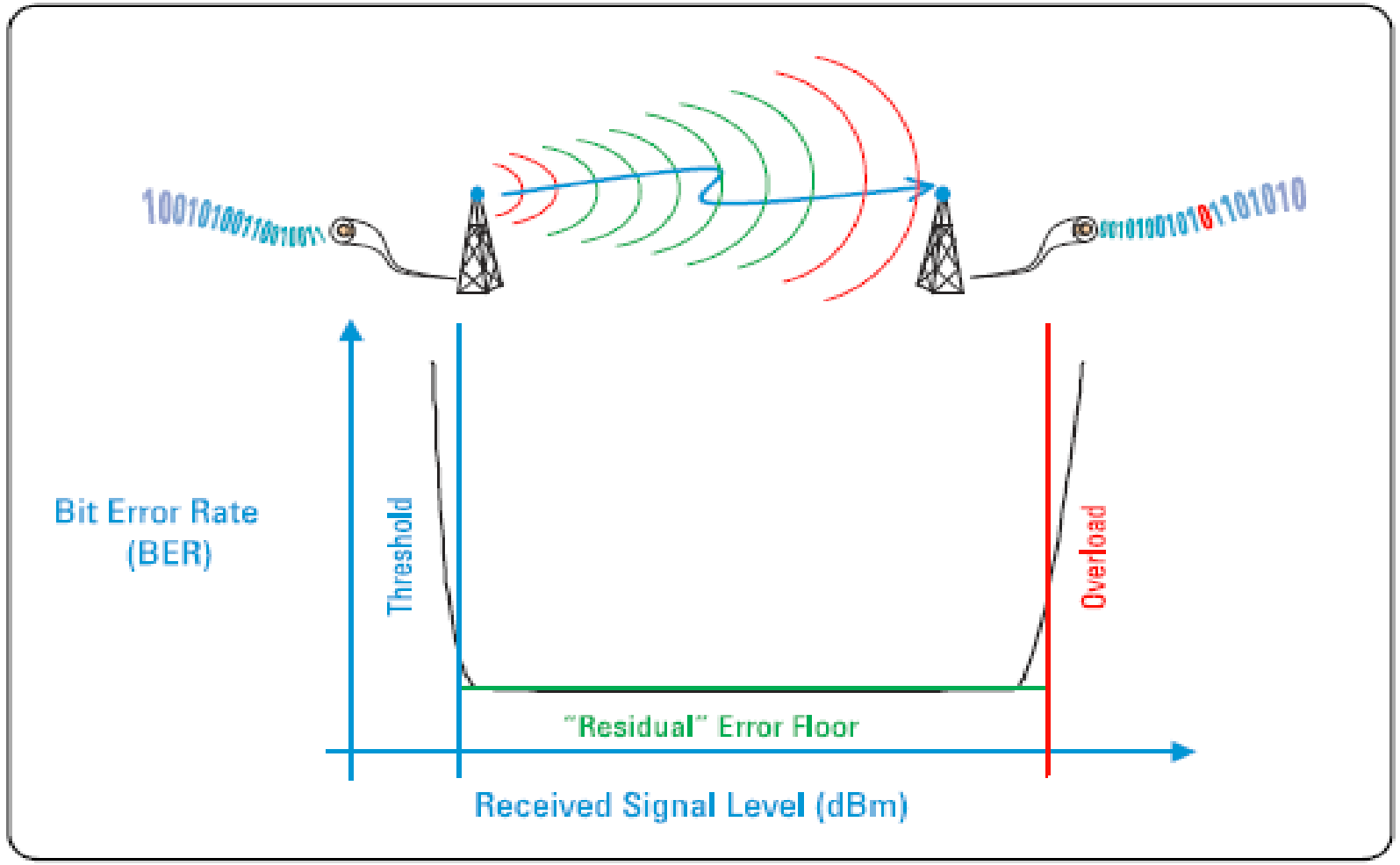

Residual BER & Receive Signal Level

QAM MODULATION

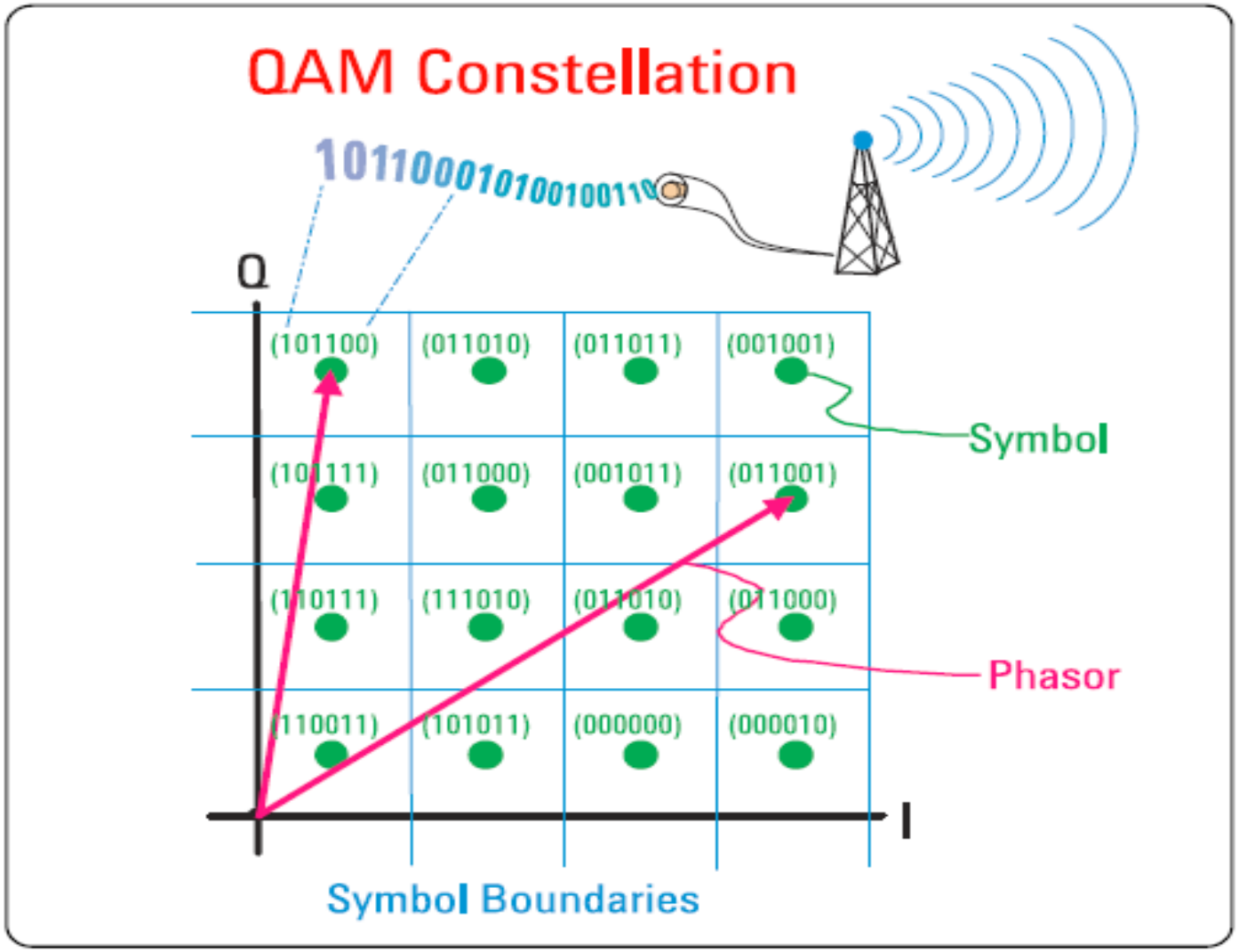

QAM Modulation Bits and Symbols

SYSTEM DIAGRAM

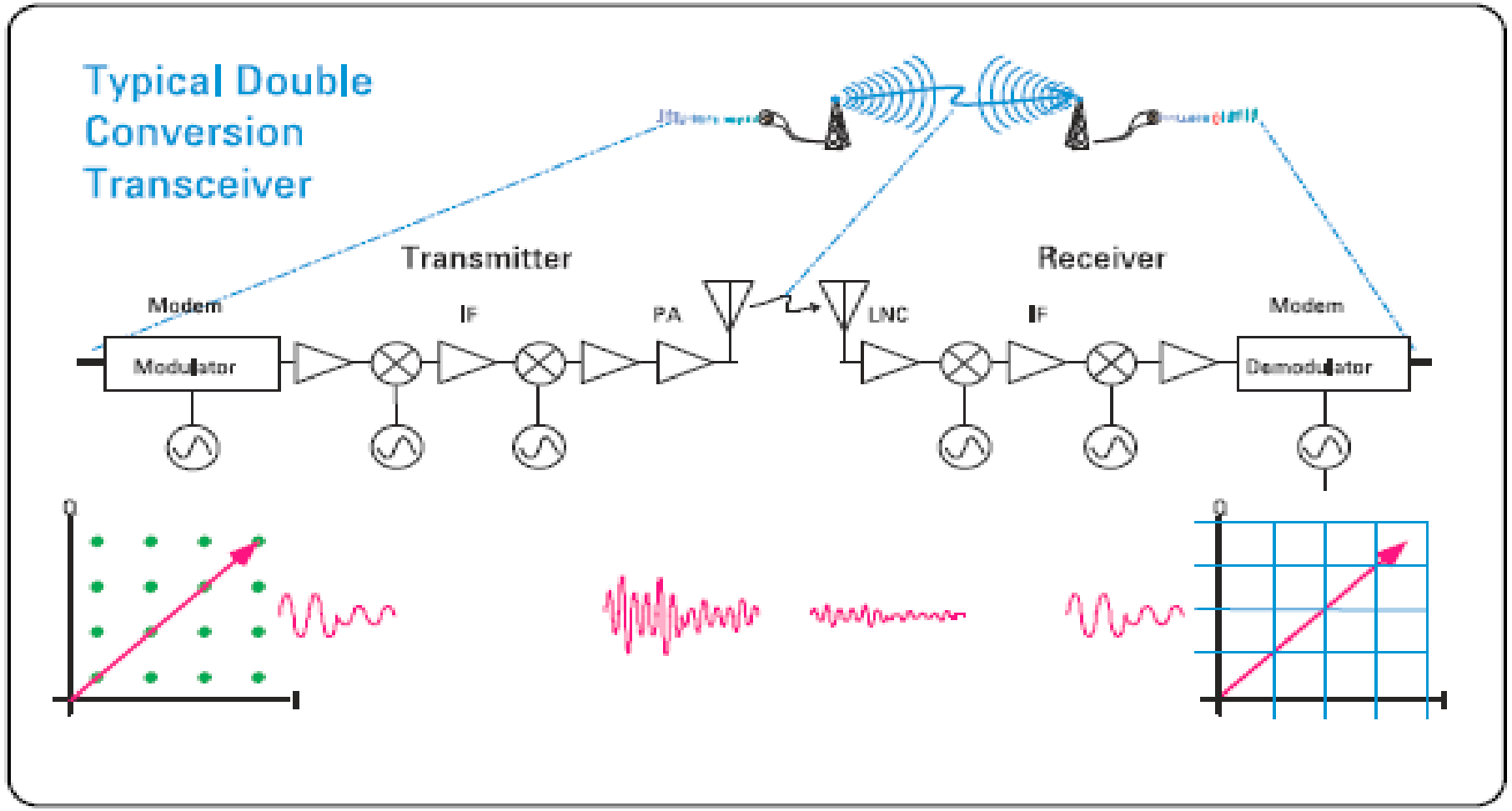

Radio Data Link System Diagram

RECEIVE PROBLEMS

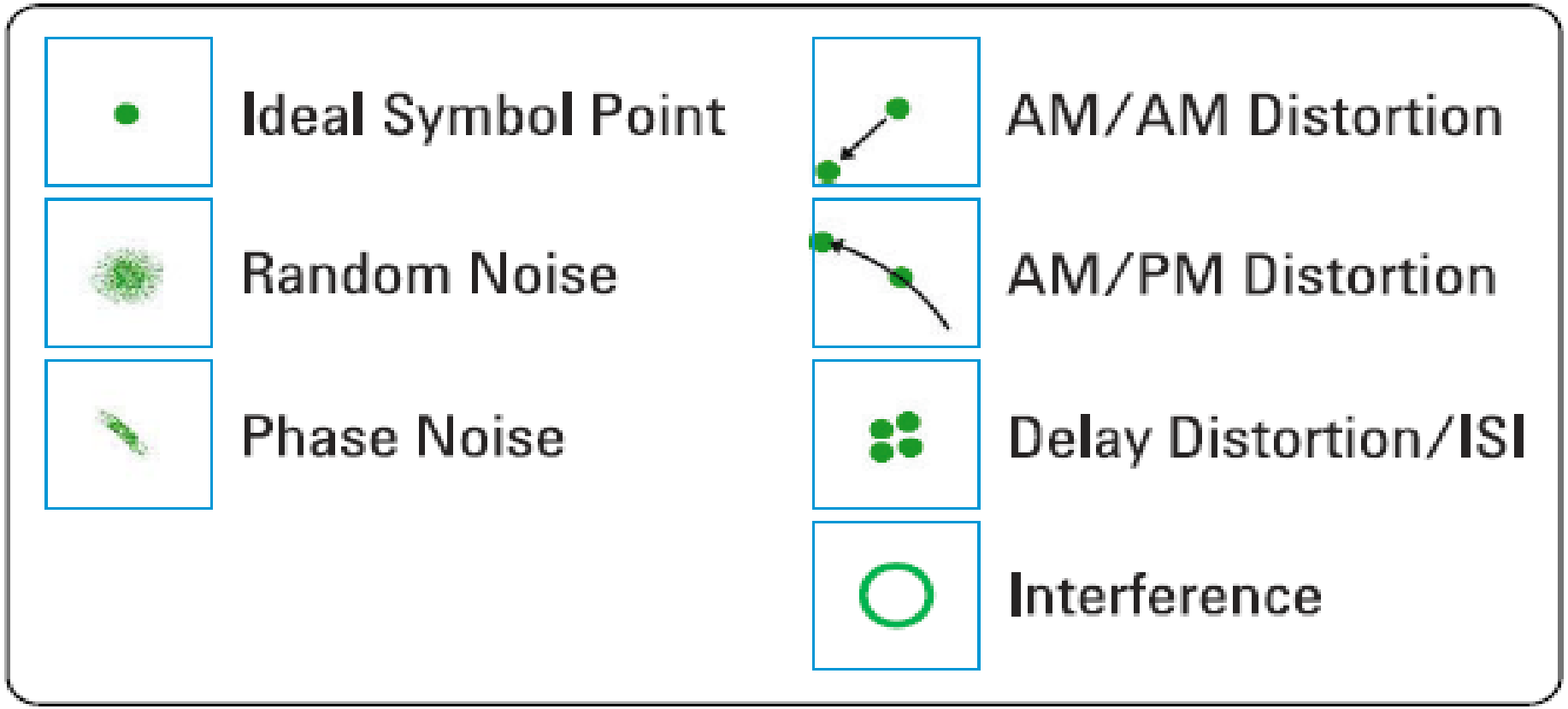

Types of Receive Signal Impairments

PRIMARY NOISE AND DISTORTION ELEMENTS

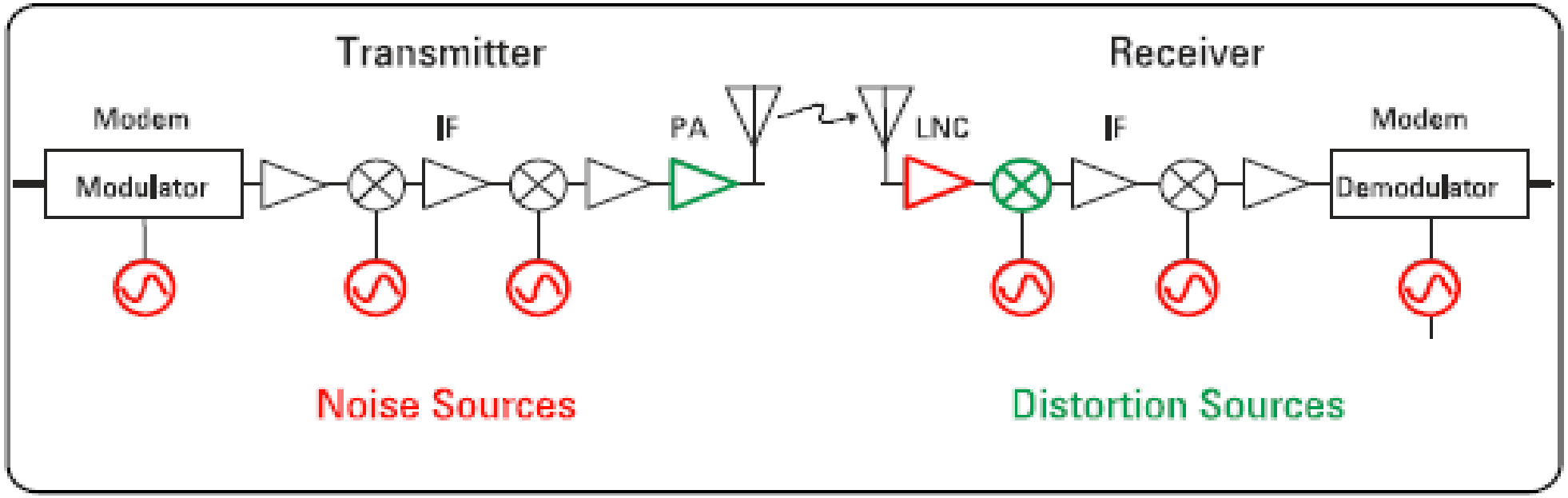

Primary Noise and Distortion Sources

PRIMARY BER INFLUENCES

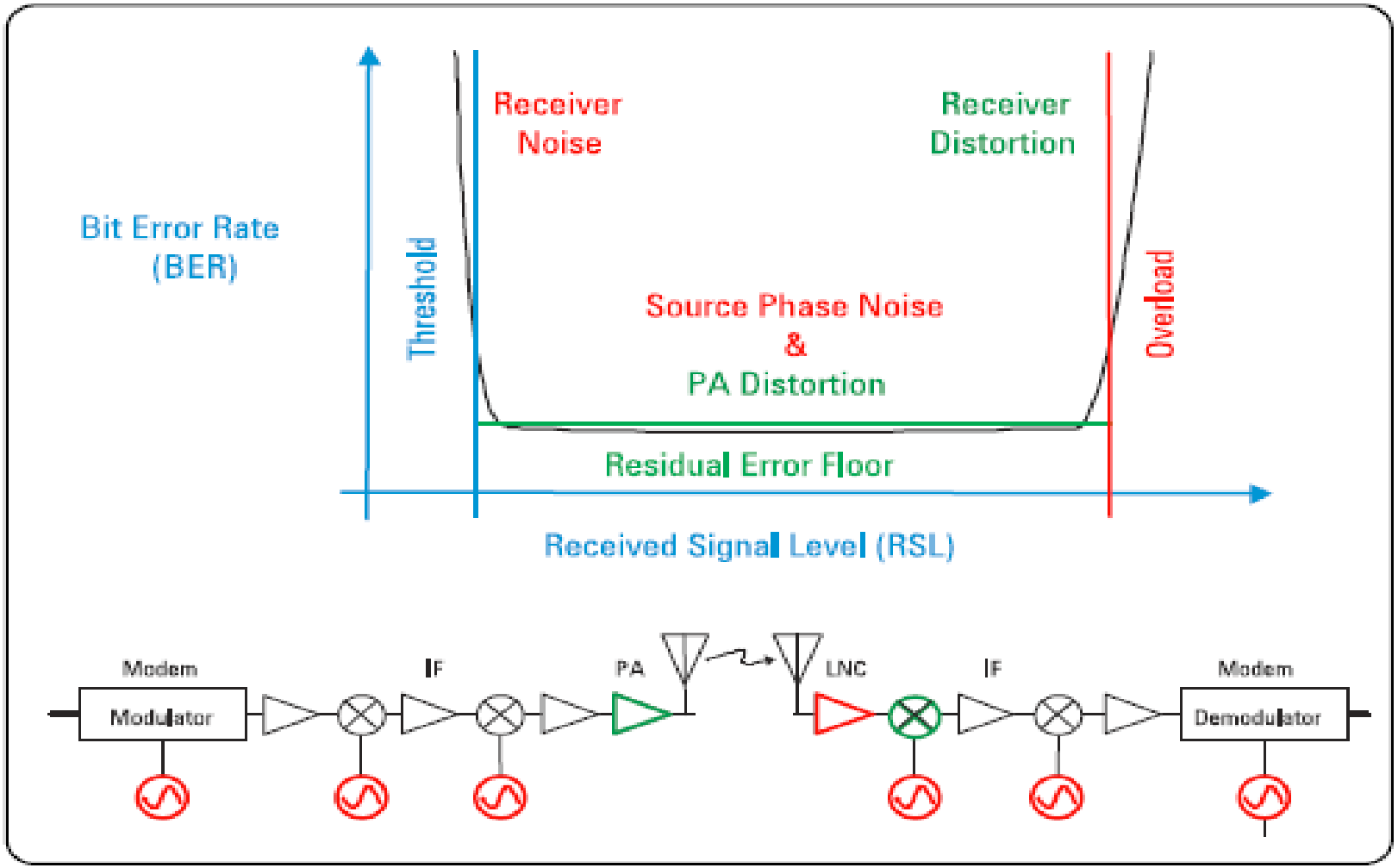

Primary BER Influences & Error Floor

EFFECT OF SOURCE PHASE NOISE

ENVELOPE
Envelope
Env1
MaxOrder=7
Freq[1]=LO1_Freq
Freq[2]=LO2_Freq
Freq[3]=LO_Freq
Freq[4]=IF_Freq
Order[1]=1
Order[2]=1
Order[3]=1
Order[4]=1
StatusLevel=2
Stop=100/SymbolRate
Step=tstep
Other=SaveToDataset=no

MeasEqn
meas1
Vfund_out=mix(IF_OUT,{1,1,-1,1})
Vfund_in=mix(IF_IN,{0,0,0,1})
Vfund_Tx=mix(RF_TX,{1,1,0,1})
Vfund_Rx=mix(RF_RX,{1,1,0,1})
time_out=time
SymbolRate_out=24.30 KHz

16 QAM Communication System Example

The transmitter consists of a double stage upconverter and the receiver is a single stage downconverter. The channel is a Line-of-Sight link with variable antenna gain parameters and an optional reflected component.

VAR
VAR1
Power_LO1=7 _dBm
Power_LO2=7 _dBm
LOpower_dBm=7 _dBm
LO1_Freq=0.900 GHz
LO2_Freq=0.51200 GHz
LO_Freq=1.455 GHz
IF_Freq=88 MHz
IFout_Freq=45 MHz
IFpower_dBm=-10
SymbolRate= 24.3 KHz
tstep=1/(4*SymbolRate)

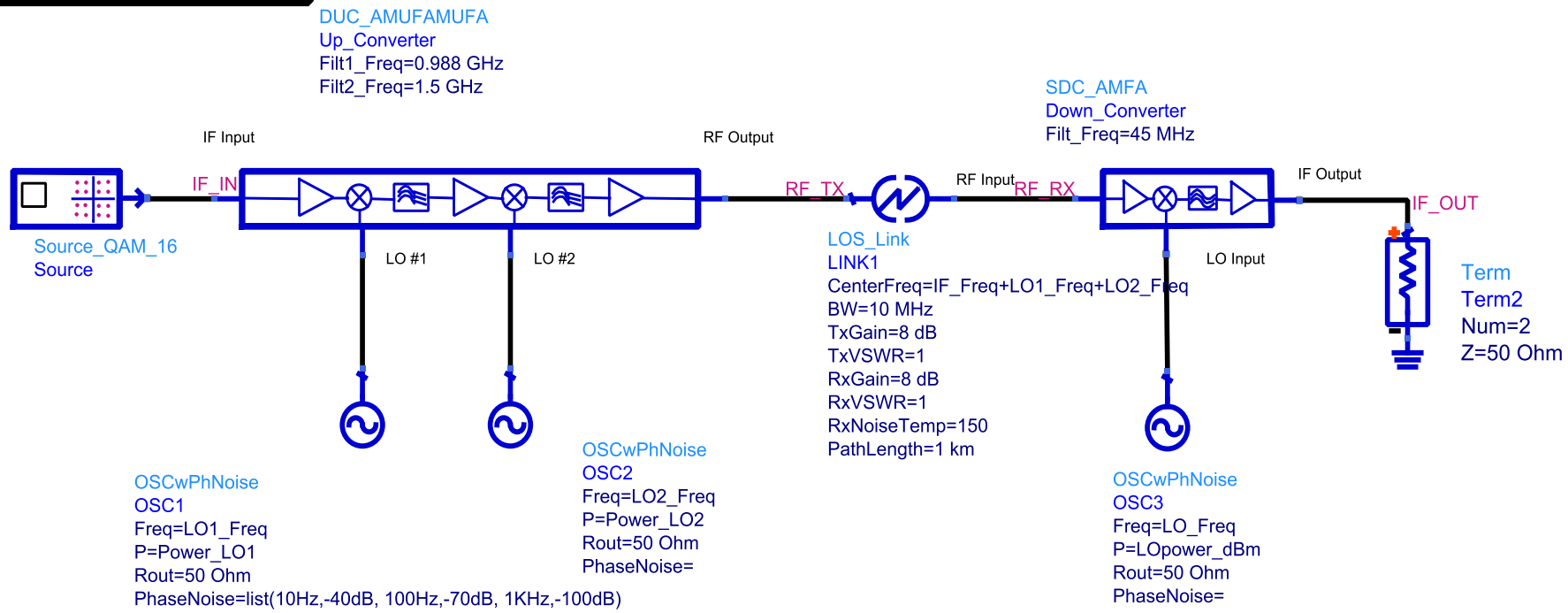

EFFECT OF SOURCE PHASE NOISE

Example

Measurement: 16 QAM Modulation
Configuration: Double Stage Up converter and Single Stage Downconverter
1. The input and output spectral response are shown as a function of offset frequency.
2. The peak to average power is displayed as a function of time.
3. The Output power as well as the ACPR is listed.
4. The ACPR mainlimits can be adjusted.

Spectrum calculations

```
Eqn Spectrum_in=dBm(fs(Vfund_in,,,,,"Kaiser"))
Eqn Spectrum_out=dBm(fs(Vfund_out,,,,,"Kaiser"))
Eqn Spectrum_Tx=dBm(fs(Vfund_Tx,,,,,"Kaiser"))
Eqn Spectrum_Rx=dBm(fs(Vfund_Rx,,,,,"Kaiser"))
```

Adjacent-channel power calculations

```
Eqn mainlimits={-16.4 KHz, 16.4 KHz}
Eqn UpChlimits={mainlimits+ 35 KHz}
Eqn LoChlimits={mainlimits-35 KHz}
Eqn TransACPR_out=acpr_vr(Vfund_out,50,mainlimits,LoChlimits,UpChlimits,"Kaiser")
Eqn TransACPR_in=acpr_vr(Vfund_in,50,mainlimits,LoChlimits,UpChlimits,"Kaiser")
```

Mean power, peak power, and peak-to-average power calculations

```
Eqn PeakPower=max(Pout)
Eqn Pout=mag(Vfund_out**2)/100
Eqn Peak_to_Ave=PeakPower/mean(Pout)
Eqn Pout_dBm=10*log(mean(Pout))+30
```

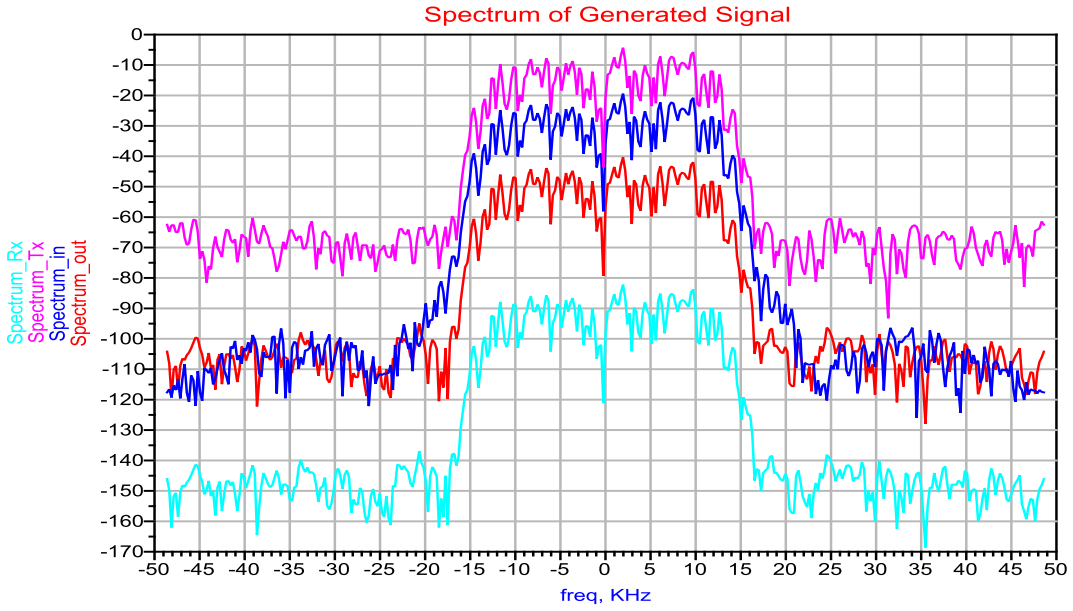

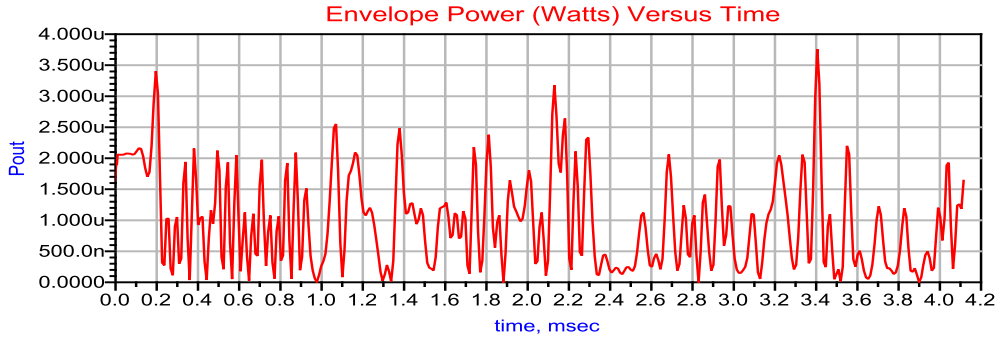

Lower Channel ACPR (Input) dBc	-73.07
Upper Channel ACPR (Input) dBc	-71.17
Lower Channel ACPR (Output) dBc	-55.35
Upper Channel ACPR (Output) dBc	-55.54
Pout (dBm)	-30.14
Peak-to-Ave (linear)	3.882
Peak-to-Ave (dB)	5.890

EFFECT OF SOURCE PHASE NOISE

Measurement: 16 QAM Modulation Trajectory
Configuration: Communication Example

1. The sampled input and output signal constellations are shown.
2. The output signal trajectory is displayed as a function of time.
3. The Error Vector Magnitude is calculated.
4. Select "Display Simulation Results" on Menu to view Spectrum

Constellation and trajectory calculations:

```
Eqn tstep=time_out[1]-time_out[0]
Eqn Rotation=0.14
Eqn delay=0.5/SymbolRate_out -1.5*tstep

Eqn Vrotated=Vfund_out*exp(j*Rotation)
Eqn Vimag=imag(Vrotated)
Eqn Vreal=real(Vrotated)
Eqn Traj=vs(Vimag,Vreal)
Eqn Const=constellation(Vreal,Vimag,SymbolRate_out,delay,Rotation,1.5ms)

Eqn SymbolRate=SymbolRate_out[0]
Eqn data=const_evm(Vfund_in, Vfund_out, SymbolRate, delay, 0, 0 ms)
```

Rotation is a parameter that allows the constellation and trajectory diagrams to be rotated by Rotation radians, if desired. It may be necessary for the user to adjust the delay parameter until the sampling points are as tightly bunched as possible on the ideal constellation grid.

Modulated Signal Trajectory and Constellation

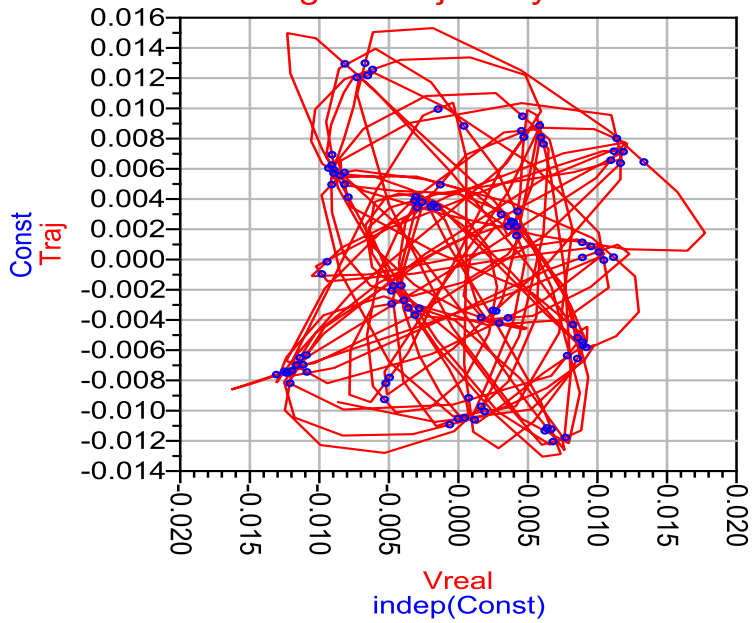

Input Constellation

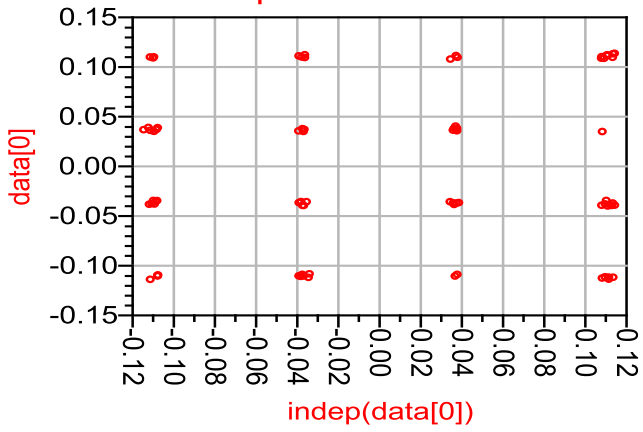

Output Constellation

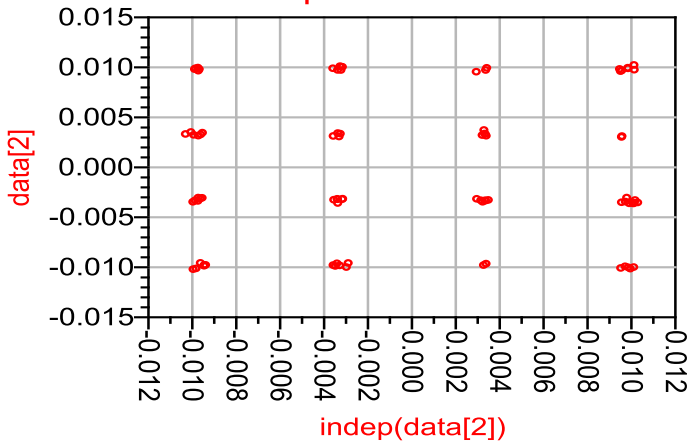

Percent Error Vector Magnitude

data[5]
0.617

EFFECT OF SOURCE PHASE NOISE

Example

Measurement: 16 QAM Modulation
Configuration: Double Stage Up converter and Single Stage Downconverter
1. The input and output spectral response are shown as a function of offset frequency.
2. The peak to average power is displayed as a function of time.
3. The Output power as well as the ACPR is listed.
4. The ACPR mainlimits can be adjusted.

Spectrum calculations

```
Eqn Spectrum_in=dBm(fs(Vfund_in,,,,,"Kaiser"))
Eqn Spectrum_out=dBm(fs(Vfund_out,,,,,"Kaiser"))
Eqn Spectrum_Tx=dBm(fs(Vfund_Tx,,,,,"Kaiser"))
Eqn Spectrum_Rx=dBm(fs(Vfund_Rx,,,,,"Kaiser"))
```

Adjacent-channel power calculations

```
Eqn mainlimits={-16.4 KHz, 16.4 KHz}
Eqn UpChlimits={mainlimits+ 35 KHz}
Eqn LoChlimits={mainlimits-35 KHz}
Eqn TransACPR_out=acpr_vr(Vfund_out,50,mainlimits,LoChlimits,UpChlimits,"Kaiser")
Eqn TransACPR_in=acpr_vr(Vfund_in,50,mainlimits,LoChlimits,UpChlimits,"Kaiser")
```

Mean power, peak power, and peak-to-average power calculations

```
Eqn PeakPower=max(Pout)
Eqn Pout=mag(Vfund_out**2)/100
Eqn Peak_to_Ave=PeakPower/mean(Pout)
Eqn Pout_dBm=10*log(mean(Pout))+30
```

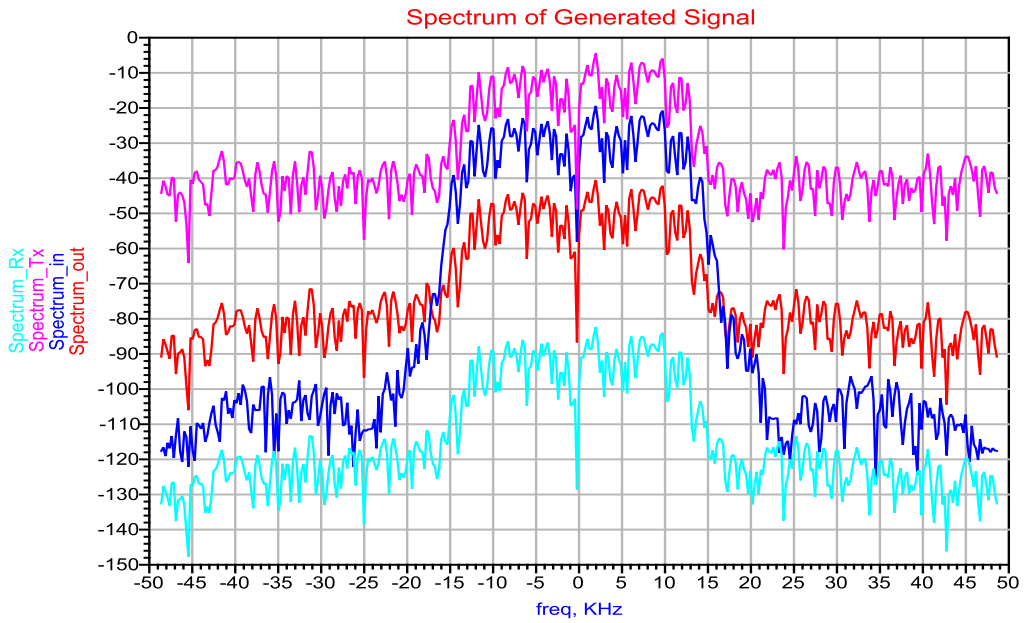

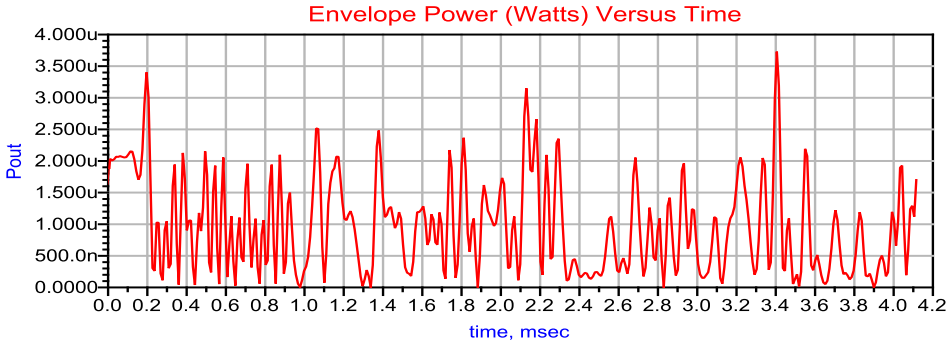

Lower Channel ACPR (Input) dBc: -73.07	Upper Channel ACPR (Input) dBc: -71.17
Lower Channel ACPR (Output) dBc: -30.35	Upper Channel ACPR (Output) dBc: -30.98
Pout (dBm): -30.15	Peak-to-Ave (linear): 3.864
	Peak-to-Ave (dB): 5.871

EFFECT OF SOURCE PHASE NOISE

Measurement: 16 QAM Modulation Trajectory
Configuration: Communication Example

1. The sampled input and output signal constellations are shown.
2. The output signal trajectory is displayed as a function of time.
3. The Error Vector Magnitude is calculated.
4. Select "Display Simulation Results" on Menu to view Spectrum

Constellation and trajectory calculations:

```
Eqn tstep=time_out[1]-time_out[0]
Eqn Rotation=0.14
Eqn delay=0.5/SymbolRate_out -1.5*tstep

Eqn Vrotated=Vfund_out*exp(j*Rotation)
Eqn Vimag=imag(Vrotated)
Eqn Vreal=real(Vrotated)
Eqn Traj=vs(Vimag,Vreal)
Eqn Const=constellation(Vreal,Vimag,SymbolRate_out,delay,Rotation,1.5ms)

Eqn SymbolRate=SymbolRate_out[0]
Eqn data=const_evm(Vfund_in, Vfund_out, SymbolRate, delay, 0, 0 ms)
```

Rotation is a parameter that allows the constellation and trajectory diagrams to be rotated by Rotation radians, if desired. It may be necessary for the user to adjust the delay parameter until the sampling points are as tightly bunched as possible on the ideal constellation grid.

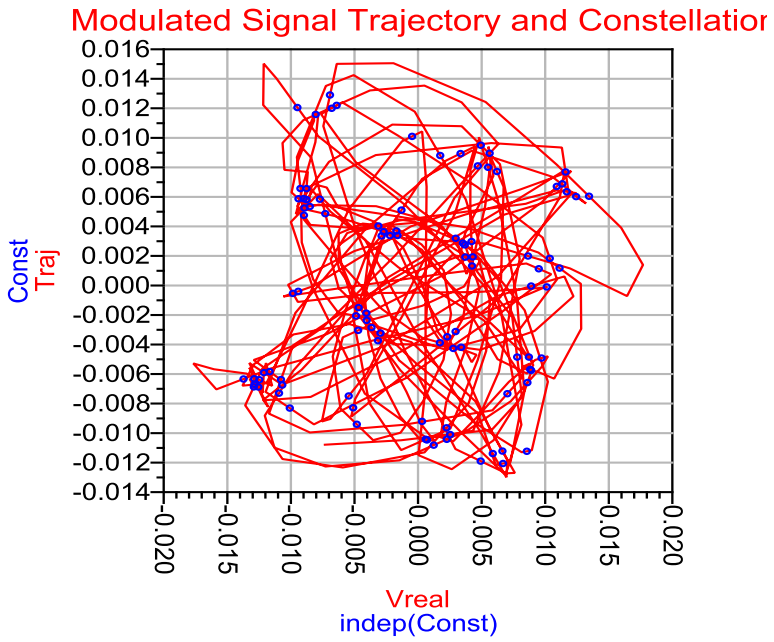

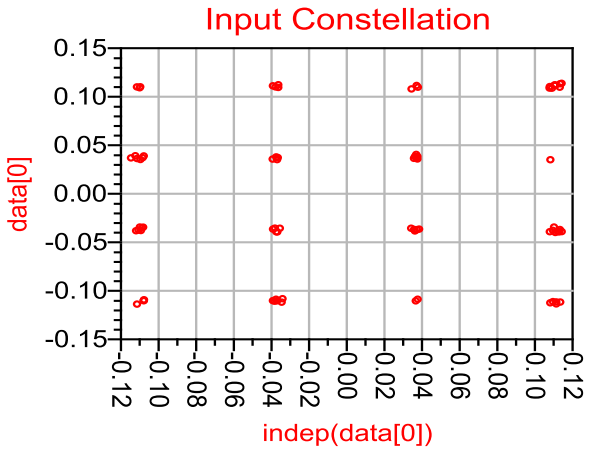

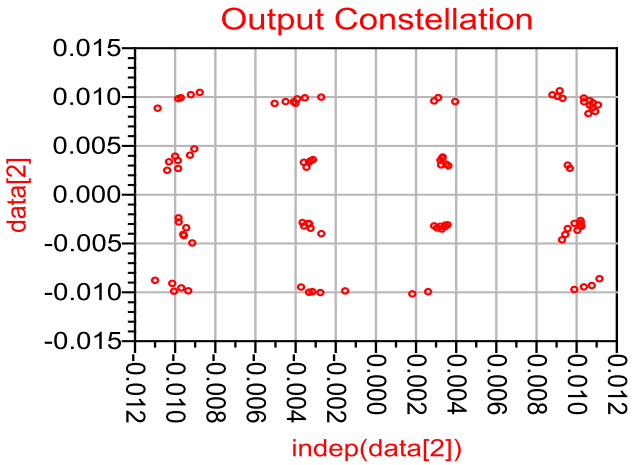

Percent Error Vector Magnitude

data[5]
5.345

Contact information

- Email: support@finetuningrf.com
- Phone: +91 80 23432021 / +91 93435 10805

Finetuning Academy

RF & Wireless matters